RC1

Pin and Bush Coupling



Features

- High torque transmission
- Damping of oscillation and vibration
- Compensation for misalignment (axial, radial and angular)
- Robust and compact design
- Maintenance free with long service life
- Easy axial plug-in assembly
- Customer-specific modifications possible

Material

- **Coupling hub:** Steel
- **Elastic elements:** NBR 80 Shore A

Design

Special materials available on request.

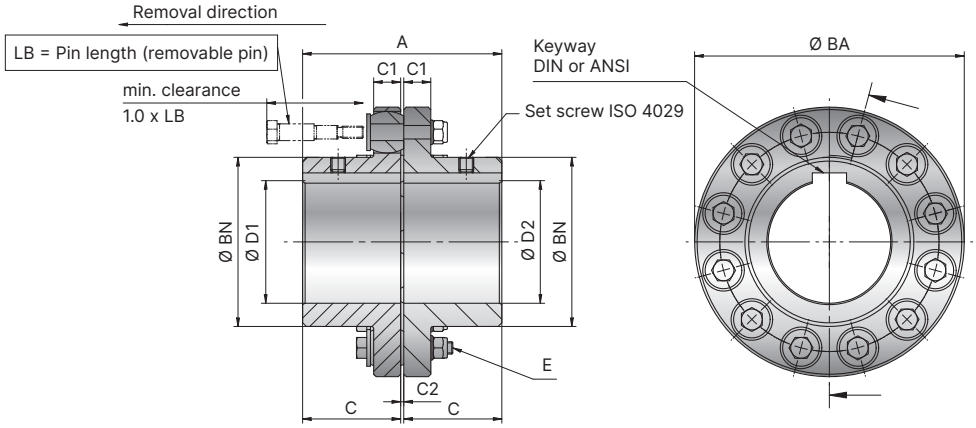

Model RC1 | Size 500–15,000

Size			500	1,000	2,000	4,000	8,000	15,000
Rated torque	(Nm)	T_{KN}	500	1,000	2,000	4,000	8,000	15,000
Max. torque	(Nm)	T_{KNmax}	1,000	2,000	4,000	8,000	16,000	30,000
Overall length	(mm)	A	98	112	147	163	203	237
Outside diameter	(mm)	Ø B_A	131	151	198	220	270	318
Hub diameter	(mm)	Ø B_N	81	101	116	138	138	186
Fit length	(mm)	C	48	55	72	80	99	116
Hub thickness	(mm)	C_1	13	13	22	22	35	35
Hub distance	(mm)	C_2	1.5	1.5	2.6	2.6	4.5	4.5
Bore diameter possible Ø to Ø F7	(mm)	$D_{1/2}$	25 - 60	32 - 75	40 - 85	52 - 100	74 - 100	100 - 135
Rubber buffer (80 Shore A)			9×20	12×20	12×34	12×34	9×55	12×55
Pin length	(mm)	LB	48	48	79	79	125	125
Pin			M6	M6	M10	M10	M16	M16
Tightening torque	(Nm)	E	7	7	34	34	143	143
Moment of inertia**	(10^{-3} kgm²)	$J_{ges.}$	7	14	57	94	282	590
Weight**	(kg)		3.3	4.9	12	16	32	49
Static torsional spring stiffness 0.25×T_{KN}	(kNm/rad)	C_T	5.3	11.3	25	35	65	130
Static torsional spring stiffness 0.5×T_{KN}	(kNm/rad)	C_T	7.7	16.6	35	50	90	200
Static torsional spring stiffness 0.75×T_{KN}	(kNm/rad)	C_T	9.6	20.7	45	65	110	240
Static torsional spring stiffness 1×T_{KN}	(kNm/rad)	C_T	11.3	24.3	50	75	130	290
Axial ±	(mm)		0.37	0.37	0.62	0.62	1.01	1.01
Lateral ±	(mm)		0.33	0.33	0.56	0.56	0.91	0.91
Angular ±	(degree)		0.16	0.14	0.18	0.16	0.21	0.18
Max. speed***	(min^{-1})		9,000	8,000	5,800	5,200	4,200	3,600

** with largest bore diameter | *** higher speeds available on request