NEW

ISO-Compliant Dimensions

Super-Low Waving Caged Ball LM Guide

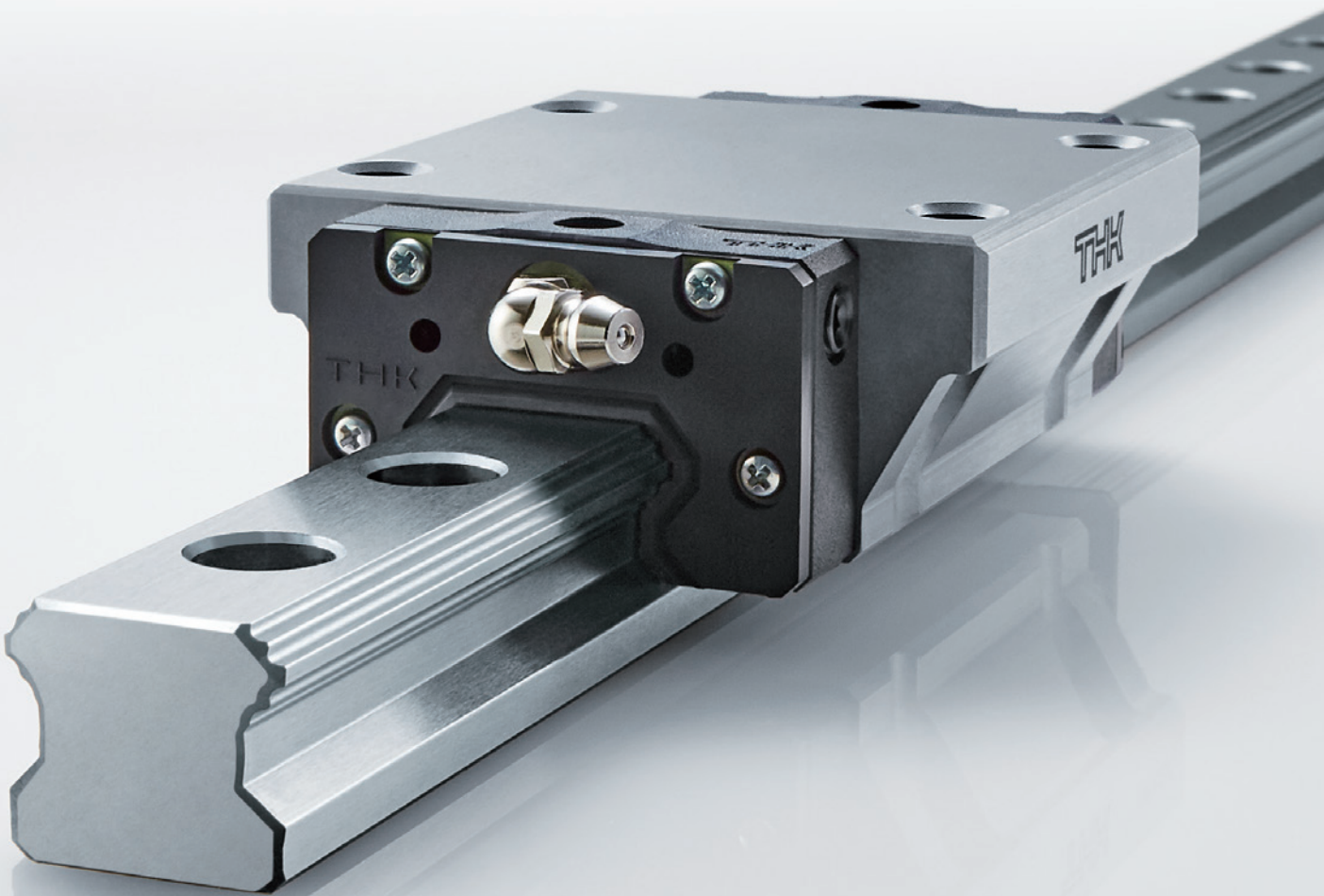

Best-in-Class Linear Motion Guides with Super-Low Waving

The Culmination of THK Technology

Taking the LM Guide to the Next Level.

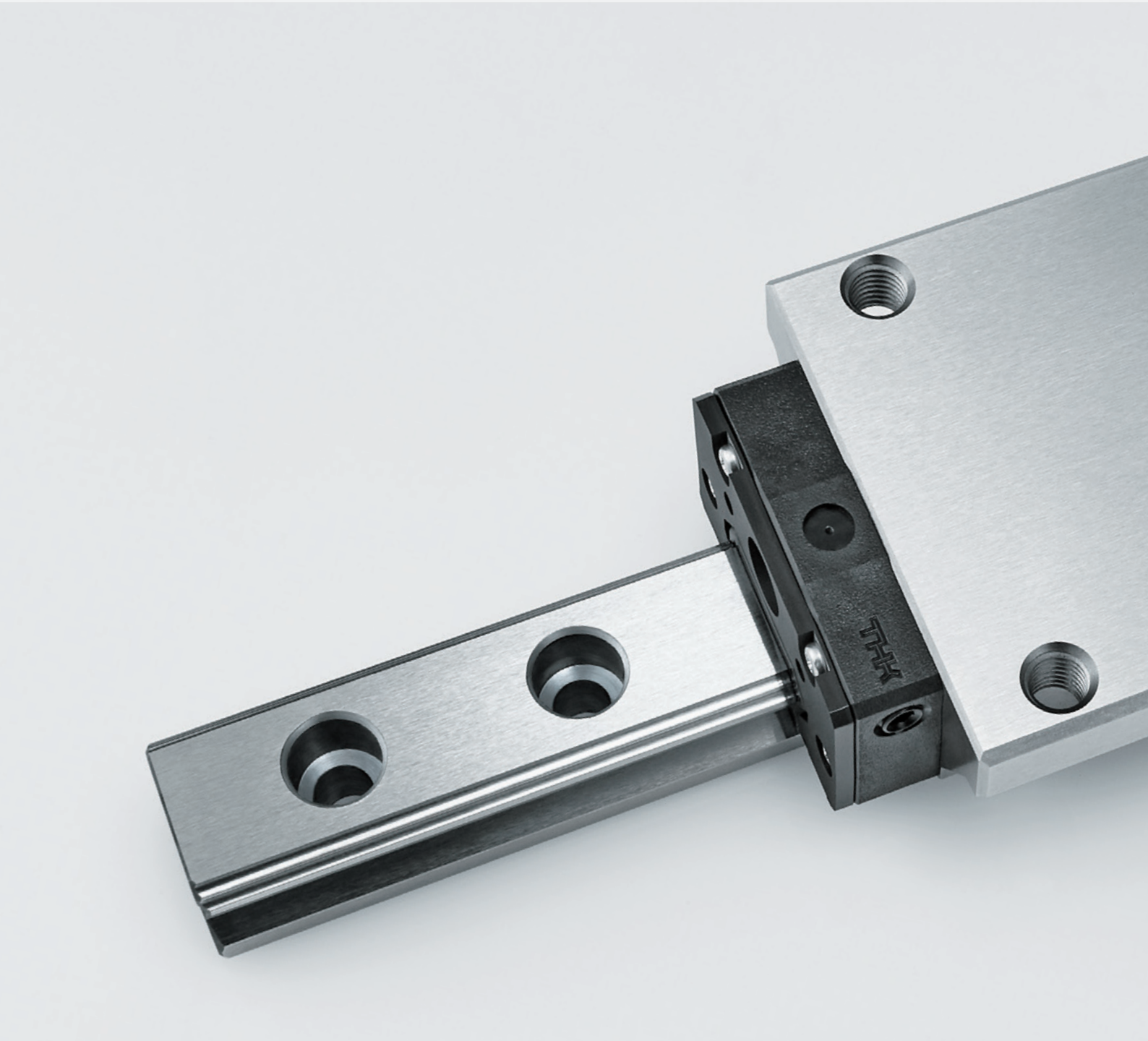

Linear Motion Guide

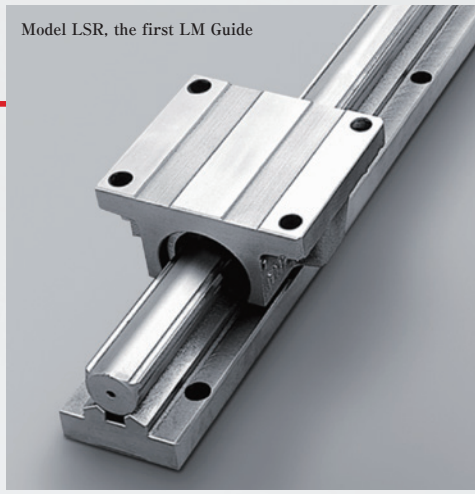
Model LSR, the first LM Guide

THK utilized its original technology to apply rolling motion to the linear motion units of machines, which was long considered to be a challenging task. In doing so, THK introduced Linear Motion Guide (LM Guide) products to the world for the first time in 1972. The use of rolling motion in linear motion components has significantly improved the mechanical performance of mechatronic equipment in areas like precision, high-speed capabilities, and energy savings.

As the product of further evolution, the Super-Low Waving Caged Ball LM Guide represents the next generation of LM Guide technology.



ISO-Compliant Dimensions

Super-Low Waving Caged Ball LM Guide

Best-in-Class Linear Motion Guides with Super-Low Waving to Support Next-Generation Manufacturing

Feature 1 Super-Low Waving

By adopting eight rows of raceways and small-diameter balls, the number of load-bearing balls within the LM block has been increased. This in turn enables the highest level of waving performance among THK LM Guide products, with super-low waving on a nanometer-level scale.

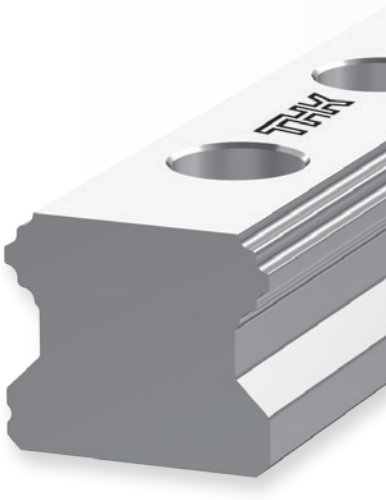

Waving Evaluation

Legend	Model No.	Max. waving amplitude	Avg. waving amplitude
——	Existing products	0.0634 μm	0.0505 μm
——	SPH25	0.0120 μm	0.0088 μm

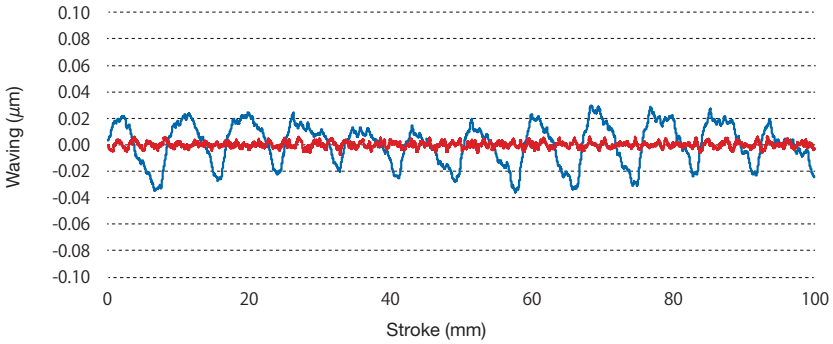

Vertical direction/Straightness B/Measurement results

Feature 2 ISO-Compliant Dimensions

Dimensions conform to globally standard ISO specifications (ISO 12090-1:2011 Rolling Bearings) even with an eight-row structure. This product comes in four sizes ranging from 25 to 45, and a lineup of six block types is available: C/LC, V/LV, and R/LR.

Model SPH-C/LC

Sizes: 25, 30, 35, 45

The flange of the LM block has tapped holes. It can be mounted from the top or the bottom. It is used in places where the table cannot have through holes for mounting bolts.

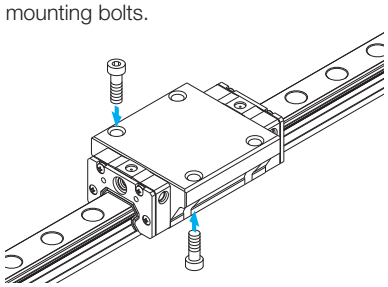

Model SPH-V/LV

Sizes: 25, 30, 35, 45

The LM block has a smaller width (W) and tapped holes. It is used in places where the space for table width is limited.

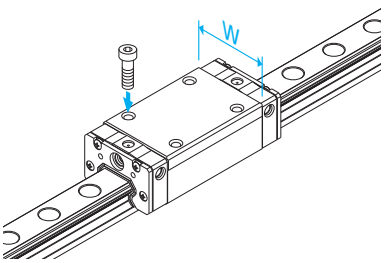

Model SPH-R/LR

Sizes: 25, 30, 35, 45

The LM block has a smaller width (W) and tapped holes. It is used in places where the space for table width is limited. It maintains the same height dimension as the Full-Ball LM Guide Model HSR-R.

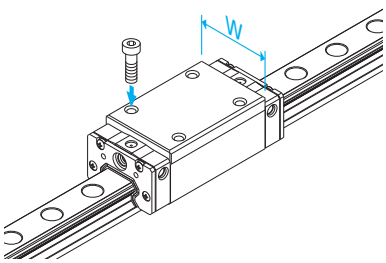

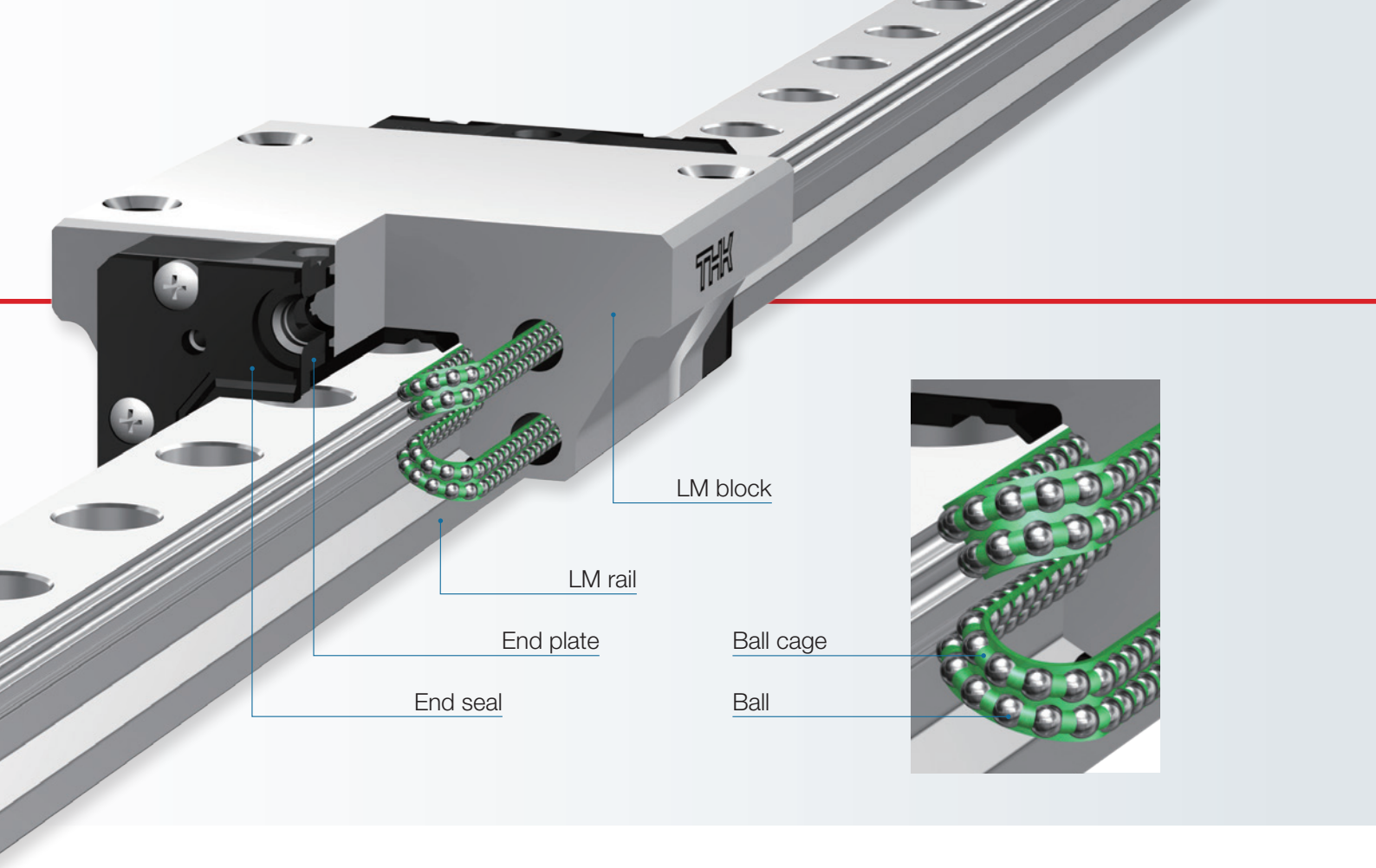

Feature 3 Advantages of Caged Ball Technology

This product adopts ball cages, which are a core piece of THK's technology that has been cultivated over many years. Use of a ball cage that retains balls as they recirculate eliminates friction between balls and increases grease retention to achieve long service life and long-term maintenance-free operation. In addition, retaining balls as they recirculate ensures smooth movement.

Feature 4 4-Way Equal Load

This product is designed to equally bear loads applied to the LM block from four directions (radial, reverse-radial, and horizontal). As a result, this model can be used in any orientation, enabling a wide variety of applications.

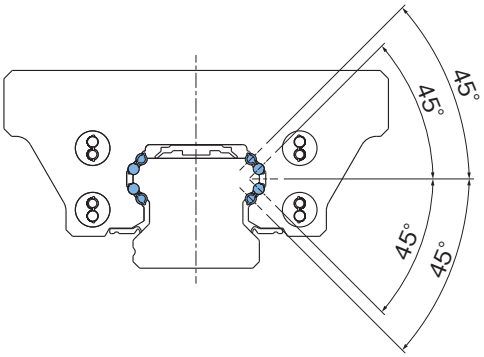

Each row of balls is placed at a contact angle of 45°, which allows the same load to be supported from all four directions.

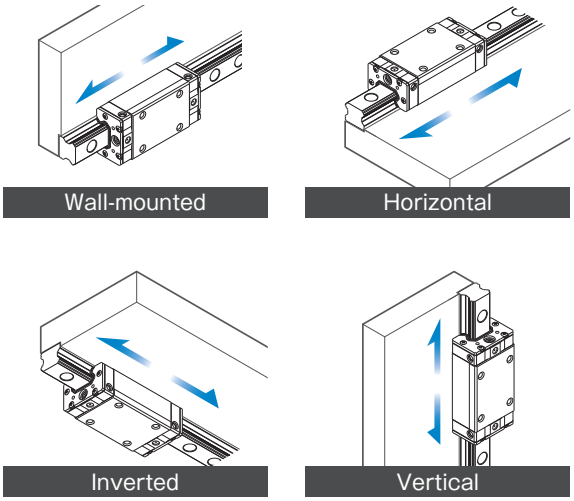

This model is equally suited for use in a horizontal orientation and any other orientation.

Contamination Protection Accessories

It is necessary to prevent foreign materials from getting inside the product, as it will lead to abnormal wear and a shortened service life. If it is likely that foreign materials will get inside, it is important to select an effective sealing or contamination protection device suited to the environmental conditions.

■ Seals

End seals made of synthetic rubber that are highly resistant to wear and side seals that further improve contamination protection effectiveness are available. Use the symbols in the table to the right to specify if you need a contamination protection accessory.

Option Compatibility

Symbol	Contamination protection accessories
UU	End seals
SS	End seals + side seals + inner seals
DD	Double seals + side seals + inner seals
ZZ	End seals + side seals + inner seals + metal scrapers
KK	Double seals + side seals + inner seals + metal scrapers

End Seal

Used in locations exposed to dust

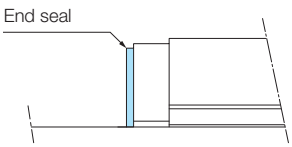

Side Seal

Used in locations where dust may enter the LM block from the side or bottom surfaces, such as vertical, horizontal, and inverted configurations

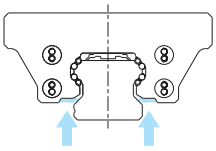

Inner Seal

Used in locations severely exposed to dust or cutting chips

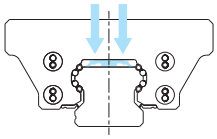

Double Seals

Used in locations exposed to excessive dust or cutting chips

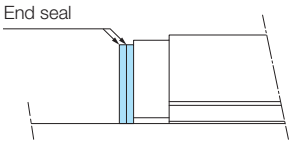

Metal Scraper (Non-Contact)

Used in locations where welding spatter may adhere to the LM rail

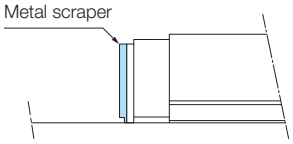

Seal Resistance Value

See the table to the right for the maximum seal resistance of SS seals per LM block when the product is lubricated.

Maximum Seal Resistance

Unit: N

Model No.	Seal symbol	Maximum seal resistance
SPH25	SS	5.5
SPH30		7.5
SPH35		11
SPH45		14

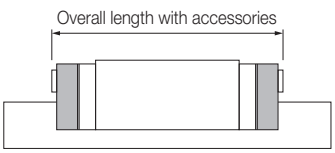

Overall LM Block Length with Seals Attached

Unit: mm

Model No.	UU	SS	DD	ZZ	KK
SPH25	97.2	97.2	102.2	103	108
SPH25L	115	115	120	120.8	125.8
SPH30	111	111	118	116.7	123.7
SPH30L	137	137	144	142.7	149.7
SPH35	129.5	129.5	137.3	135.2	143
SPH35L	153.1	153.1	160.9	158.8	166.6
SPH45	153.6	153.6	162.8	161.2	170.4
SPH45L	189.6	189.6	198.8	197.2	206.4

■ Dedicated Cap for LM Rail Mounting Holes

Using dedicated caps to cover the LM rail mounting holes helps prevent foreign material from entering the mounting holes and LM block.

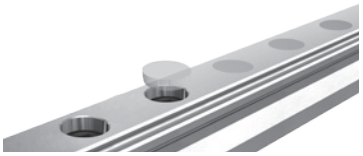

Option Compatibility

Model No.	CV cap	GC cap
SPH25	Yes	Yes
SPH30	Yes	Yes
SPH35	Yes	Yes
SPH45	Yes	Yes

CV Cap

The caps are made of a special synthetic resin.

The CV cap is the successor to the C cap, and its new structure makes it easier to insert.

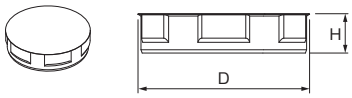

Model No.	Cap model	Bolts used	Main dimensions (mm)	
			D	H
SPH25	CV6	M6	11.4	2.6
SPH30, SPH35	CV8	M8	14.4	3.3
SPH45	CV12	M12	20.4	3.4

GC Cap

GC caps are made of metal. (They are RoHS compliant.)

GC caps adhere closer to the counterbore than CV caps and C caps, so there is no clearance once they are inserted.

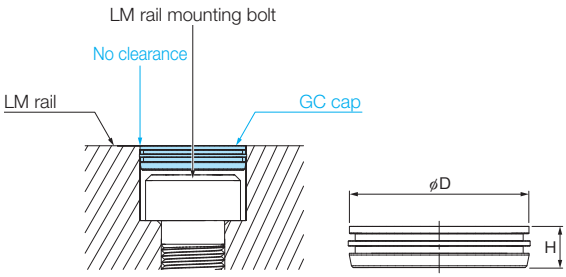

Model No.	Cap model	Bolts used	Main dimensions (mm)	
			D	H
SPH25	GC6	M6	11.36	2.5
SPH30, SPH35	GC8	M8	14.36	3.5
SPH45	GC12	M12	20.36	4.6

Notes: GC caps are only sold with an LM Guide. They are not sold separately. The LM Guide model number code will have "GC" at the end when it is delivered.

Model Number Coding

SPH25 LV 2 SS C0 + 1000L UP GC

GC caps attached

GC caps cannot be used with LM rails that have undergone surface treatment.
LM rail mounting holes for GC caps are special. (The mouth is not chamfered.)
Be careful not to injure your hand when inserting GC caps.
Be sure to make the GC caps level with the upper surface of the LM rail and clean (wipe) that surface after insertion.
Contact THK if this product will be used in special environments such as in a vacuum, or at very low or high temperatures.

■ Dedicated Bellows

Please contact THK for more information about specialized bellows.

Lubrication

Standard Grease

AFB-LF Grease is a general-purpose grease that provides excellent extreme pressure and mechanical stability properties through the use of a refined mineral oil base oil and a lithium-based consistency enhancer.

Note: Non-standard greases are also available. For details, contact THK.

AFB-LF Representative Physical Properties

Item		Representative property	Testing method
Consistency enhancer		Lithium-based	
Base oil		Refined mineral oil	
Base oil kinematic viscosity: mm^2/s (40°C)		170	JIS K 2220 23
Worked penetration (25°C, 60 W)		275	JIS K 2220 7
Mixing stability (100,000 W)		345	JIS K 2220 15
Dropping point: °C		193	JIS K 2220 8
Evaporation volume: mass% (99°C, 22 h)		0.4	JIS K 2220 10
Oil separation rate: mass% (100°C, 24 h)		0.6	JIS K 2220 11
Copper plate corrosion (B method, 100°C, 24 h)		Passed	JIS K 2220 9
Low-temperature torque: mN·m (-20°C)	Starting	130	JIS K 2220 18
	Rotational	51	
4-ball testing (welding load): N		3089	ASTM D2596
Operating temperature range: °C		-15 to 100	
Color		Yellowish brown	

■ Lubrication Holes

The LM block can be lubricated from the side or top surface. In order to prevent foreign material from entering the LM block, lubrication holes are not through holes in blocks with regular specifications. When using the lubrication hole, contact THK. When using the lubrication hole on the upper surface of models SPH-R and SPH-LR, a separate lubrication adapter is required. Contact THK for details.

The lubricant may not reach the raceway if the LM Guide is not installed in a horizontal orientation. Be sure to let THK know the mounting orientation and the exact position in each LM block where the grease nipple or the piping joint should be attached.

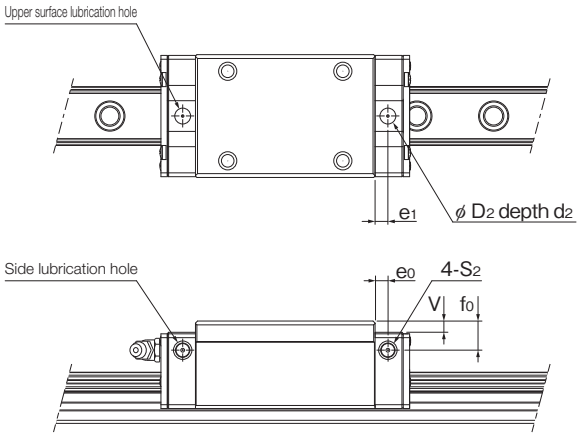

Note: Upper surface lubrication is for oil lubrication only. Contact THK if you are considering using the lubrication hole on the upper surface for grease lubrication.

Unit: mm

Model No.	Side lubrication hole			Upper surface lubrication hole				
	e_0	f_0	S_2	D_2	(O-ring)	V	e_1	d_2
SPH25C/LC	5	7.4	M6×0.75	6.2	P3	0.4	5	1
SPH25V/LV	5	7.4	M6×0.75	6.2	P3	0.4	5	1
SPH25R/LR	5	11.4	M6×0.75	6.2	P3	4.4	5	1
SPH30C/LC	5.8	8.8	M6×0.75	6.2	P3	0.4	5.8	1
SPH30V/LV	5.8	8.8	M6×0.75	6.2	P3	0.4	5.8	1
SPH30R/LR	5.8	11.8	M6×0.75	6.2	P3	3.4	5.8	1
SPH35C/LC	6.5	9	M6×0.75	6.2	P3	0.4	6.5	1
SPH35V/LV	6.5	9	M6×0.75	6.2	P3	0.4	6.5	1
SPH35R/LR	6.5	16	M6×0.75	6.2	P3	7.4	6.5	1
SPH45C/LC	8	11.1	M6×0.75	10.2	P7	1	8	1
SPH45V/LV	8	11.1	M6×0.75	10.2	P7	1	8	1
SPH45R/LR	8	21.1	M6×0.75	10.2	P7	11	8	1

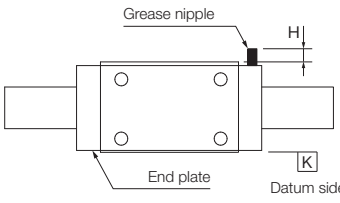

Location for mounting the side grease nipple

Dimensional Increase with Grease Nipple

Model No.	Side surface lubrication hole	
	H (mm)	Standard grease nipple
SPH25C/LC	–	A-M6F
SPH25V/LV	7.8	A-M6F
SPH25R/LR	7.8	A-M6F
SPH30C/LC	–	A-M6F
SPH30V/LV	7.1	A-M6F
SPH30R/LR	7.1	A-M6F
SPH35C/LC	–	A-M6F
SPH35V/LV	7.1	A-M6F
SPH35R/LR	7.1	A-M6F
SPH45C/LC	–	A-M6F
SPH45V/LV	7.4	A-M6F
SPH45R/LR	7.4	A-M6F

Radial Clearance Specifications

The radial clearance significantly affects the running accuracy, load resistance, and rigidity. Therefore, it is necessary to select a clearance that is appropriate for the application. An appropriate radial clearance will prevent vibrations and impacts from occurring when the device is running, as well as improve the service life and accuracy of the LM Guide. The Model SPH has two types of radial clearance (preload): light preload and medium preload.

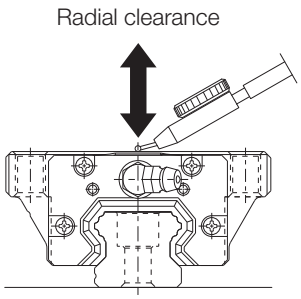

Radial Clearance Specifications Unit: μm

Model No.	Light preload	Medium preload
	C1	C0
SPH25	-2 to -1	-3 to -2
SPH30	-2 to -1	-4 to -2
SPH35	-3 to -1	-4 to -3
SPH45	-3 to -2	-5 to -3

Accuracy Standards

The accuracy of the LM Guide is specified for each model in terms of the dimensional tolerance for height and width, the difference between height and width in a pair, and running parallelism. The Model SPH has two types of accuracy standards: Super Precision grade and Ultra Precision grade.

■ Difference in Height M

The difference in height M indicates the difference between the minimum and maximum values of the height (M) of each of the LM blocks used together on the same plane.

■ Difference in Width W_2

Indicates a difference between the minimum and maximum values of the width (W_2) between each of the LM blocks, mounted on one LM rail in combination, and the LM rail.

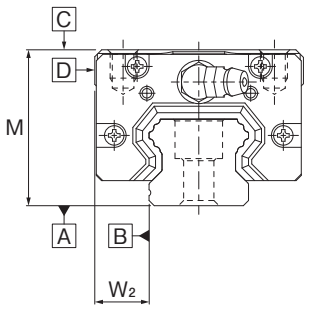

Accuracy Standards Unit: mm

Model No.	Item	Super Precision grade	Ultra Precision grade
		SP	UP
SPH25 SPH30 SPH35	Dimensional tolerance in height M	0 -0.02	0 -0.01
	Difference in height M	0.005	0.003
	Dimensional tolerance in width W_2	0 -0.015	0 -0.01
	Difference in width W_2	0.005	0.003
	Running parallelism of surface C against surface A	See LM Rail Length and Running Parallelism by Accuracy Standard on next page	
	Running parallelism of surface D against surface B		
SPH45	Dimensional tolerance in height M	0 -0.03	0 -0.015
	Difference in height M	0.005	0.003
	Dimensional tolerance in width W_2	0 -0.025	0 -0.015
	Difference in width W_2	0.005	0.003
	Running parallelism of surface C against surface A	See LM Rail Length and Running Parallelism by Accuracy Standard on next page	
	Running parallelism of surface D against surface B		

Running Parallelism

Refers to the tolerance for parallelism between the LM block and the LM rail datum surface when the LM block travels the whole length of the LM rail bolted to a reference surface.

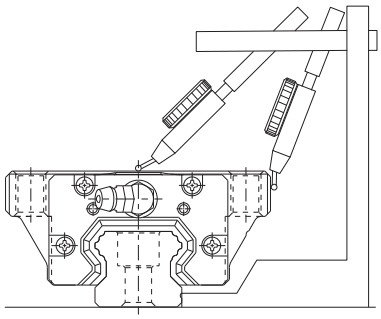

LM Rail Length and Running Parallelism by Accuracy Standard Unit: μm

LM rail length (mm)		Running parallelism value	
Above	Up to	Super Precision grade	Ultra Precision grade
–	50	1.5	1
50	80	1.5	1
80	125	1.5	1
125	200	1.5	1
200	250	1.5	1
250	315	1.5	1
315	400	2	1.5
400	500	2.5	1.5
500	630	3	2
630	800	3.5	2
800	1,000	4	2.5
1,000	1,250	4.5	3
1,250	1,600	5	4
1,600	2,000	5.5	4.5
2,000	2,500	6	5
2,500	2,840	6.5	5.5

Static Safety Factor

To calculate a load applied to the LM Guide, the average load required for calculating the service life and the maximum load needed for calculating the static safety factor must be obtained first. In particular, if the system starts and stops frequently, if a cutting load acts on the system, or if a large moment caused by an overhanging load is applied, it may experience an unexpectedly large load. When selecting a model number, make sure that the desired model is capable of supporting the required maximum load (whether stationary or in motion).

Guidelines for the static safety factor are shown in the table to the right.

Static Safety Factor (f_S) (Guideline)

Load conditions[1]	Lower limit of f_S
Without vibrations or impacts	2 or greater
With vibrations or impacts	5 or greater

[1] In general, factors that cause vibration and impacts include acceleration and deceleration, sudden starts and stops, transmission of vibration and impacts from external devices and machines, and changes in processing force over time.

$$f_S = \frac{C_0}{P_{max}}$$

f_S: Static safety factor
C_0: Basic static load rating (N)
P_{max}: Maximum applied load (N)

Nominal Life and Service Life Time

Calculating the Nominal Life

The nominal life (L_{10}) is obtained from the following formulas using the basic dynamic load rating (C) and the calculated load acting on the LM Guide (P_C). Calculate the nominal life of an LM Guide with balls using a basic dynamic load rating based on a nominal life of 50 km.

LM Guide with balls
(Using a basic dynamic load rating such that the nominal life will be 50 km)

$$L_{10} = \left(\frac{C}{P_C}\right)^3 \times 50$$

L_{10}: Nominal life (km)
C: Basic dynamic load rating (N)
P_C: Calculated load (N)

Note: These nominal life formulas may not apply if the length of the stroke is less than or equal to twice the length of the LM block.

When comparing the nominal life (L_{10}), you must take into account whether the basic dynamic load rating was defined based on 50 km or 100 km. Convert the basic dynamic load rating based on ISO 14728-1 as necessary.

ISO-regulated basic dynamic load rating conversion formula:

LM Guide with balls

$$C_{100} = \frac{C_{50}}{1.26}$$

C_{50}: Basic dynamic load based on a nominal life of 50 km
C_{100}: Basic dynamic load based on a nominal life of 100 km

■ Calculating the Modified Nominal Life

During use, an LM Guide may be subjected to vibrations and shocks as well as fluctuating loads, which are difficult to detect. In addition, the surface hardness of the raceways, the operating temperature, and having LM blocks arranged directly behind one another will have a decisive impact on the service life. Taking these factors into account, the modified nominal life (L_{10m}) can be calculated according to the following formula.

Modified factor α

$$\alpha = \frac{f_H \cdot f_T \cdot f_C}{f_W}$$

α: Modified factor
f_H: Hardness factor
f_T: Temperature factor
f_C: Contact factor
f_W: Load factor

Note: See the general catalog for details of the hardness factor, temperature factor, contact factor, and load factor.

Modified nominal life L_{10m}:

LM Guide with balls

$$L_{10m} = \left(\alpha \times \frac{C}{P_C}\right)^3 \times 50$$

L_{10m}: Modified nominal life (km)
C: Basic dynamic load rating (N)
P_C: Calculated load (N)

Once the nominal life (L_{10}) has been obtained, the service life time can be obtained using the following formula if the stroke length and the number of cycles are constant.

$$L_h = \frac{L_{10} \times 10^6}{2 \times \ell_s \times n_1 \times 60}$$

L_h: Service life time (h)
ℓ_s: Stroke length (mm)
n_1: Cycles per minute (min^{-1})

Standard and Maximum Lengths of the LM Rail

The standard and maximum lengths of Model SPH LM rails are shown in the following table. For special rail lengths, it is recommended to use a value corresponding to the G, g dimensions from the table. As the G, g dimensions increase, that portion becomes less stable, and the accuracy may be negatively affected.

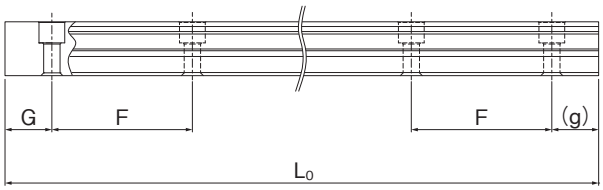

Standard Lengths and Maximum Lengths of LM Rails Unit: mm

Model No.	SPH25	SPH30	SPH35	SPH45
LM rail Standard length (L_0)	220	280	280	570
	280	360	360	675
	340	440	440	780
	400	520	520	885
	460	600	600	990
	520	680	680	1,095
	580	760	760	1,200
	640	840	840	1,305
	700	920	920	1,410
	760	1,000	1,000	1,515
	820	1,080	1,080	1,620
	940	1,160	1,160	1,725
	1,000	1,240	1,240	1,830
	1,060	1,320	1,320	1,935
	1,120	1,400	1,400	2,040
	1,180	1,480	1,480	2,145
	1,240	1,560	1,560	2,250
	1,300	1,640	1,640	2,355
	1,360	1,720	1,720	2,460
	1,420	1,800	1,800	2,565
	1,480	1,880	1,880	2,670
	1,540	1,960	1,960	2,775
	1,600	2,040	2,040	–
	1,720	2,200	2,200	–
	1,840	2,360	2,360	–
	1,960	2,520	2,520	–
	2,080	2,680	2,680	–
	2,200	2,840	2,840	–
	2,320	–	–	–
	2,440	–	–	–
Standard pitch F	30	40	40	52.5
G, g dimension	20	20	20	22.5
Max length	2,800	2,840	2,840	2,775

Dimensional Table

SPH-C/LC

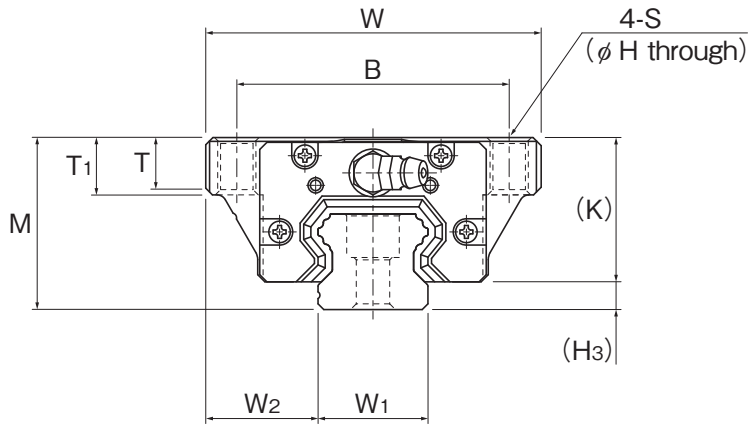

Model No.		Outer dimensions			LM block dimensions								For front lubrication			Side lubrication hole				
		Height	Width	Length											Grease nipple					
		M	W	L	B	C	S	H	L_1	T	T_1	K	N	E		e_0	f_0	S_2	H_3	
SPH25	C	36	70	97.2	57	45	M8	6.8	70.2	10.6	12	30.2	7.4	12	B-M6×0.75	5	7.4	M6×0.75	5.8	
	LC			115					88											
SPH30	C	42	90	111	72	52	M10	8.5	80	13	15	35	8	12	B-M6×0.75	5.8	8.8	M6×0.75	7	
	LC			137					106											
SPH35	C	48	100	129.5	82	62	M10	8.5	93.7	13	15	40.5	9	12	B-M6×0.75	6.5	9	M6×0.75	7.5	
	LC			153.1					117.3											
SPH45	C	60	120	153.6	100	80	M12	10.5	112.4	15.8	18	51.1	10.6	12	B-M6×0.75	8	11.1	M6×0.75	8.9	
	LC			189.6					148.4											

Model Number Coding

Select an option Note: Specify each item for the models in the catalog.

SPH25 LC 2 SS C0 +1000L UP -II

- SPH25: Model No.
- LC: LM block type C/LC
- 2: Number of LM blocks on one rail
- SS: Contamination protection accessory symbol
- C0: Radial clearance symbol C1: Light preload C0: Medium preload
- +1000L: LM rail length
- UP: Accuracy symbol SP: Super Precision grade UP: Ultra Precision grade
- -II: Symbol for number of rails used on the same plane

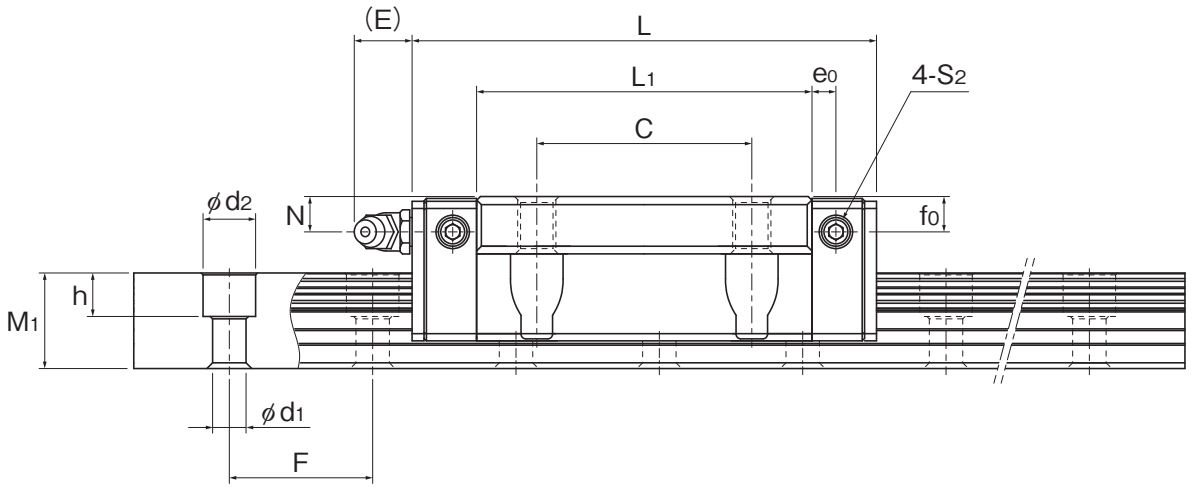

Unit: mm

	LM rail dimensions					Basic load rating		Static permissible moment* kN·m					Mass	
	Width W_1 $^{0}_{-0.05}$	W_2	Height M_1	Pitch F	$d_1 \times d_2 \times h$	C (kN)	C_0 (kN)	M_A 1 block	M_A 2 blocks	M_B 1 block	M_B 2 blocks	M_C 1 block	LM block (kg)	LM rail (kg/m)
	23	23.5	20	30	7×11×9	16.9	35.3	0.408	1.59	0.408	1.59	0.321	0.7	2.8
						19.7	43.9	0.626	2.46	0.626	2.46	0.399	0.9	
	28	31	23	40	9×14×12	23.5	47	0.615	2.41	0.615	2.41	0.525	1.2	4.3
						28.6	62.2	1.07	4.21	1.07	4.21	0.694	1.6	
	34	33	26	40	9×14×12	32.7	64	0.969	3.84	0.969	3.84	0.882	1.9	5.7
						38.4	80.6	1.53	6.03	1.53	6.03	1.11	2.4	
	45	37.5	32	52.5	14×20×17	45.4	89	1.63	6.4	1.63	6.4	1.71	3.3	9.1
						54.7	116	2.75	11	2.75	11	2.23	4.3	

Notes: Static permissible moment* 1 block: Static permissible moment value with 1 LM block
2 blocks: Static permissible moment during use with 2 LM blocks in close contact with each other
The balls will fall out of the block if it is removed from the rail.

Options

Grease Nipple (A-M6F)

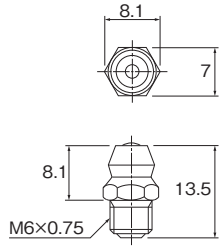

Grease Nipple (B-M6F)

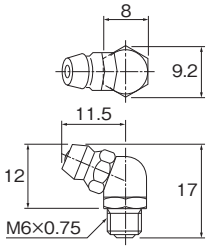

Note: Lubrication accessories (piping joints and grease nipples) other than the standard options are also available.

Please contact THK if required. (For details about other lubrication accessories, please see the “Accessories for Lubrication” section of the general catalog.)

Dimensional Table

SPH-V/LV

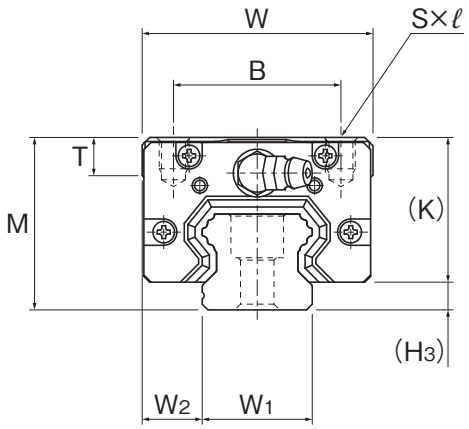

Model No.		Outer dimensions			LM block dimensions						For front lubrication			Side lubrication hole				
		Height	Width	Length									Grease nipple					
		M	W	L	B	C	S×ℓ	L_1	T	K	N	E		e_0	f_0	S_2	H_3	
SPH25	V	36	48	97.2	35	35	M6×6.5	70.2	8	30.2	7.4	12	B-M6×0.75	5	7.4	M6×0.75	5.8	
	LV			115		50		88										
SPH30	V	42	60	111	40	40	M8×8	80	8	35	8	12	B-M6×0.75	5.8	8.8	M6×0.75	7	
	LV			137		60		106										
SPH35	V	48	70	129.5	50	50	M8×10	93.7	14.7	40.5	9	12	B-M6×0.75	6.5	9	M6×0.75	7.5	
	LV			153.1		72		117.3										
SPH45	V	60	86	153.6	60	60	M10×15	112.4	14.9	51.1	10.6	12	B-M6×0.75	8	11.1	M6×0.75	8.9	
	LV			189.6		80		148.4										

Model Number Coding

Select an option Note: Specify each item for the models in the catalog.

SPH25 | LV | 2 | SS | C0 | +1000L | UP | -II

- SPH25: Model No.
- LV: LM block type V/LV
- 2: Number of LM blocks on one rail
- SS: Contamination protection accessory symbol
- C0: Radial clearance symbol C1: Light preload C0: Medium preload
- +1000L: LM rail length
- UP: Accuracy symbol SP: Super Precision grade UP: Ultra Precision grade
- -II: Symbol for number of rails used on the same plane

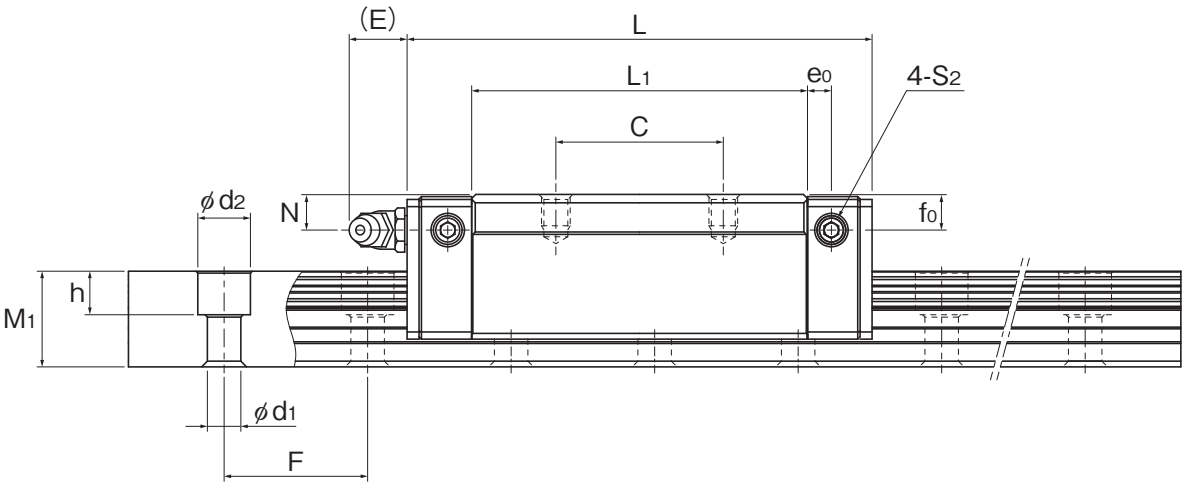

Unit: mm

	LM rail dimensions					Basic load rating		Static permissible moment* kN·m					Mass	
	Width W_1 0 -0.05	W_2	Height M_1	Pitch F	$d_1 \times d_2 \times h$	C (kN)	C_0 (kN)	M_A 1 block	M_A 2 blocks	M_B 1 block	M_B 2 blocks	M_C 1 block	LM block (kg)	LM rail (kg/m)
	23	12.5	20	30	7×11×9	16.9	35.3	0.408	1.59	0.408	1.59	0.321	0.5	2.8
						19.7	43.9	0.626	2.46	0.626	2.46	0.399	0.7	
	28	16	23	40	9×14×12	23.5	47	0.615	2.41	0.615	2.41	0.525	0.9	4.3
						28.6	62.2	1.07	4.21	1.07	4.21	0.694	1.1	
	34	18	26	40	9×14×12	32.7	64	0.969	3.84	0.969	3.84	0.882	1.5	5.7
						38.4	80.6	1.53	6.03	1.53	6.03	1.11	1.8	
	45	20.5	32	52.5	14×20×17	45.4	89	1.63	6.4	1.63	6.4	1.71	2.5	9.1
						54.7	116	2.75	11	2.75	11	2.23	3.4	

Notes: Static permissible moment* 1 block: Static permissible moment value with 1 LM block
2 blocks: Static permissible moment during use with 2 LM blocks in close contact with each other
The balls will fall out of the block if it is removed from the rail.

Options

Grease Nipple (A-M6F)

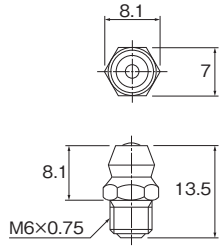

Grease Nipple (B-M6F)

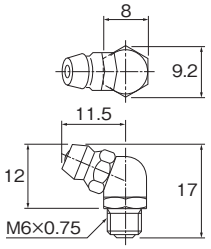

Note: Lubrication accessories (piping joints and grease nipples) other than the standard options are also available.

Please contact THK if required. (For details about other lubrication accessories, please see the “Accessories for Lubrication” section of the general catalog.)

Dimensional Table

SPH-R/LR

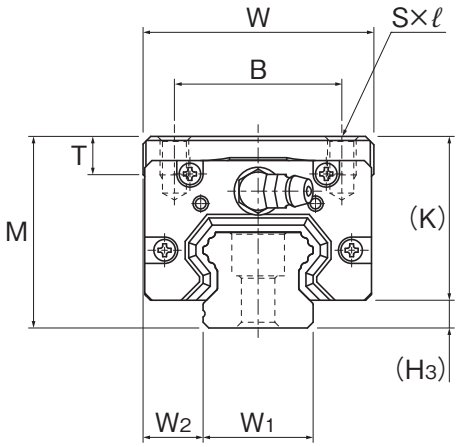

Model No.		Outer dimensions			LM block dimensions						For front lubrication			Side lubrication hole				
		Height	Width	Length									Grease nipple					
		M	W	L	B	C	S×ℓ	L_1	T	K	N	E		e_0	f_0	S_2	H_3	
SPH25	R	40	48	97.2	35	35	M6×8	70.2	8	34.2	11.4	12	B-M6×0.75	5	11.4	M6×0.75	5.8	
	LR			115		50		88										
SPH30	R	45	60	111	40	40	M8×10	80	8	38	11	12	B-M6×0.75	5.8	11.8	M6×0.75	7	
	LR			137		60		106										
SPH35	R	55	70	129.5	50	50	M8×12	93.7	14.7	47.5	16	12	B-M6×0.75	6.5	16	M6×0.75	7.5	
	LR			153.1		72		117.3										
SPH45	R	70	86	153.6	60	60	M10×17	112.4	14.9	61.1	20.6	12	B-M6×0.75	8	21.1	M6×0.75	8.9	
	LR			189.6		80		148.4										

Model Number Coding

Select an option Note: Specify each item for the models in the catalog.

SPH25 | LR | 2 | SS | C0 | +1000L | UP | -II

- SPH25: Model No.
- LR: LM block type R/LR
- 2: Number of LM blocks on one rail
- SS: Contamination protection accessory symbol
- C0: Radial clearance symbol C1: Light preload C0: Medium preload
- +1000L: LM rail length
- UP: Accuracy symbol SP: Super Precision grade UP: Ultra Precision grade
- -II: Symbol for number of rails used on the same plane

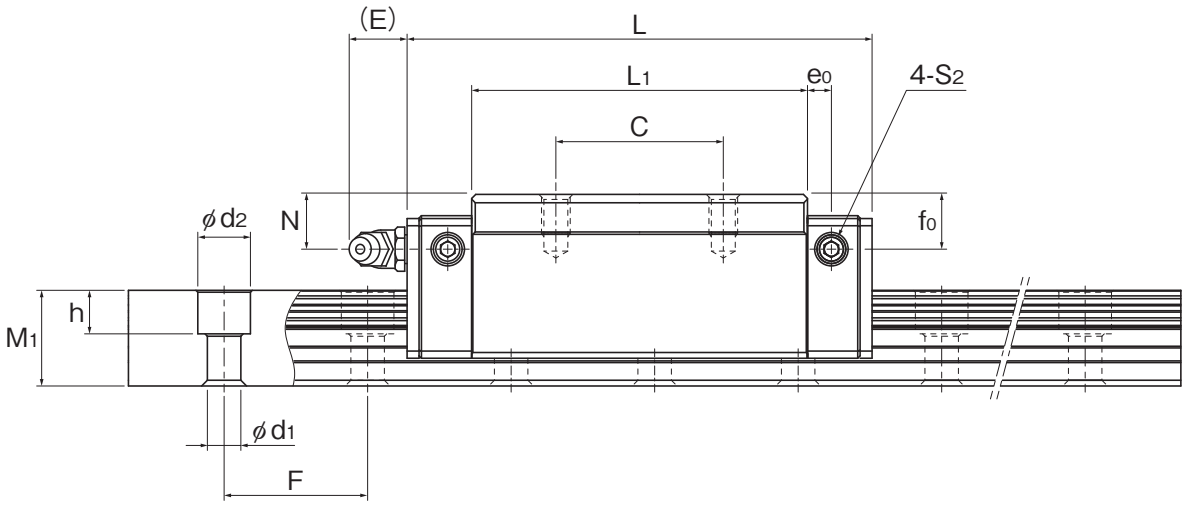

Unit: mm

	LM rail dimensions					Basic load rating		Static permissible moment* kN·m					Mass	
	Width W_1 0 -0.05	W_2	Height M_1	Pitch F	$d_1 \times d_2 \times h$	C (kN)	C_0 (kN)	M_A 1 block	M_A 2 blocks	M_B 1 block	M_B 2 blocks	M_C 1 block	LM block (kg)	LM rail (kg/m)
	23	12.5	20	30	7×11×9	16.9	35.3	0.408	1.59	0.408	1.59	0.321	0.6	2.8
						19.7	43.9	0.626	2.46	0.626	2.46	0.399	0.8	
	28	16	23	40	9×14×12	23.5	47	0.615	2.41	0.615	2.41	0.525	1	4.3
						28.6	62.2	1.07	4.21	1.07	4.21	0.694	1.3	
	34	18	26	40	9×14×12	32.7	64	0.969	3.84	0.969	3.84	0.882	1.8	5.7
						38.4	80.6	1.53	6.03	1.53	6.03	1.11	2.3	
	45	20.5	32	52.5	14×20×17	45.4	89	1.63	6.4	1.63	6.4	1.71	3.3	9.1
						54.7	116	2.75	11	2.75	11	2.23	4.3	

Notes: Static permissible moment* 1 block: Static permissible moment value with 1 LM block
2 blocks: Static permissible moment during use with 2 LM blocks in close contact with each other
The balls will fall out of the block if it is removed from the rail.

Options

Grease Nipple (A-M6F)

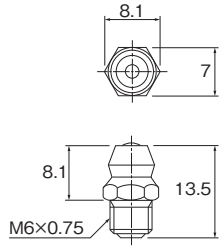

Grease Nipple (B-M6F)

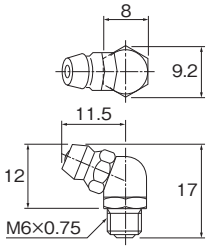

Note: Lubrication accessories (piping joints and grease nipples) other than the standard options are also available.

Please contact THK if required. (For details about other lubrication accessories, please see the “Accessories for Lubrication” section of the general catalog.)

Shoulder Height of the Mounting Base and the Corner Radius

The LM rail and LM block ordinarily have a reference surface on the side face to allow easy installation and highly accurate positioning. The corner of the mounting shoulder must be machined to have a recess, or machined to be smaller than the corner radius r, to prevent interference with the chamfer of the LM rail or the LM block.

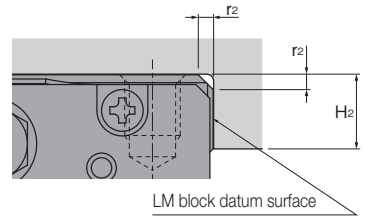

LM Block

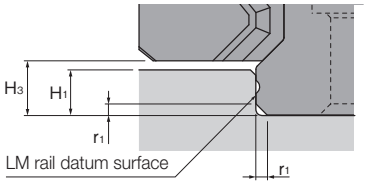

LM Rail

Shoulder Height of the Mounting Base and the Corner Radius Unit: mm

Model No.	LM rail Corner radius r_1 (max)	LM block Corner radius r_2 (max)	LM rail shoulder height H_1	LM block shoulder height H_2	H_3
SPH25	1	1	5	5	5.8
SPH30	1	1	5	5	7
SPH35	1	1	6	6	7.5
SPH45	1	1	7.5	8	8.9

Reference Error Tolerance for the Mounting Surface

■ Reference Parallel Error Tolerance between Two Rails

Mounting surface error may affect the service life of the LM Guide. The following tables show the approximate reference parallel error tolerance (P) between two rails in general use.

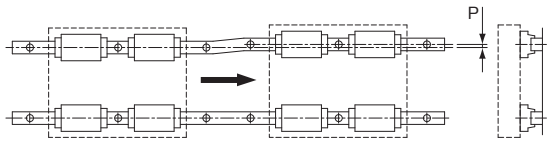

Unit: μm

Model No.	Light preload	Medium preload
	C1	C0
SPH25	5.5	3.5
SPH30	6.5	4.5
SPH35	8	5.5
SPH45	8.5	6.5

■ Reference Height Error Tolerance between Two Rails

The table shows the value (X) of the reference height error tolerance in the axial direction for rail span (a), which is proportional to the rail span (a).

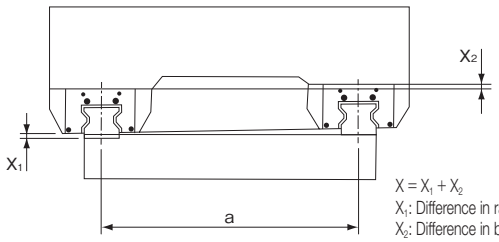

$X = X_1 + X_2$
X_1: Difference in rail mounting surface height
X_2: Difference in block mounting surface height

Unit: mm

Model No.	Light preload	Medium preload
	C1	C0
Reference height error tolerance (X)	0.00024a	0.00016a

Example Calculations

Reference height error tolerance when rail span a = 500 mm
$X = 0.0003 \times 500 = 0.15$

■ Reference Height Error Tolerance in the Axial Direction

The table below shows the value (Y) of the reference height error tolerance in the axial direction for block span (b), which is proportional to the block span (b).

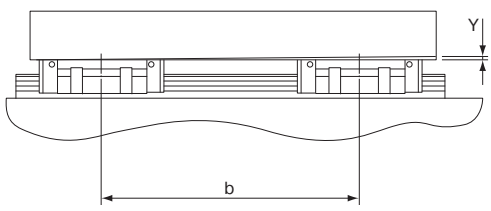

Unit: mm

Model No.	Light preload	Medium preload
	C1	C0
Reference height error tolerance (Y)	0.00006b	0.00004b

Handling

(1) Please use at least two people to move any product weighing 20 kg or more, or use a cart or another method of conveyance. Otherwise, it may cause injury or damage the unit.
(2) Do not disassemble the parts. This may result in loss of functionality.
(3) Tilting an LM block or LM rail may cause them to fall by their own weight.
(4) Take care not to drop or strike the LM Guide. Otherwise, it may cause injury or damage the unit. Even if there is no outward indication of damage, a sudden impact could prevent the unit from functioning properly.
(5) Do not remove the LM block from the LM rail during setup.
(6) Placing a hand inside the LM rail mounting hole may lead to the hand being caught between the block and rail and cause injury.
(7) Wear appropriate safety gear, such as protective gloves and safety shoes, when handling the product.

Precautions on Use

(1) Prevent foreign material, such as cutting chips or coolant, from entering the product. Failure to do so could damage the product.
(2) Prevent foreign materials, such as cutting chips, coolant, corrosive solvents, or water from getting in the product by using a bellows or cover when the product is used in an environment where such a thing is likely.
(3) Do not use the product at temperatures of 80°C or higher. Unless the unit is specially designed to be heat-resistant, exposure to such temperatures may deform or damage plastic and rubber parts.
(4) If foreign materials such as cutting chips adhere to the product, replenish the lubricant after cleaning the product.
(5) Very small strokes can inhibit the formation of an oil film between the raceways and the area of contact for the balls, resulting in fretting. Therefore, be sure to use a type of grease with high fretting resistance properties if the stroke will be small. We recommend periodically allowing the LM block to stroke a distance roughly equal to its length to help ensure that a film forms between the raceways and balls.
(6) Do not forcibly drive a pin, key, or other positioning device into the product. This could create indentations on the raceway and impair the product's function.
(7) If, for operational reasons, it becomes absolutely necessary to remove the LM block from the LM rail and reattach it, a special removing/mounting jig must be used for this purpose. (The removing/mounting jig is not provided as standard. To obtain one, contact THK.)
(8) When using a removing/mounting jig, align the ends of the LM rail and the jig and mount the block when the jig and rail are parallel.
(9) Mounting the block while it is tilted can lead to contamination by foreign materials, damage to internal components, or dropped balls.
(10) Inserting and using the LM block on the LM rail while balls are missing could lead to premature failure of the product.
(11) If any balls fall out of the LM block, contact THK. Do not use the product in that condition.
(12) If the LM Guide breaks due to an accident or another cause, the LM block may become dislodged from the LM rail and fall. For the safe use of this product, take precautions such as adding a mechanism to prevent the block from falling.
(13) For the bolt length, select a length that will leave a clearance at the bolt tip in relation to the effective tap depth.
(14) If the mounting material lacks sufficient rigidity or accuracy, the bearing load can be focused in one area, and bearing functionality will dramatically decrease. Make sure the housing and base are sufficiently rigid, the anchoring bolts are strong enough, and the component is mounted correctly.
(15) When removing the LM block from the LM rail and then replacing the block, an LM block mounting/removing jig that facilitates such installation is available. Contact THK for details.

Lubrication

(1) Thoroughly remove anti-rust oil and apply lubricant before using the product.
(2) Do not mix different lubricants. Even greases containing the same type of consistency enhancer may, if mixed, interact negatively due to disparate additives or other ingredients.
(3) When using the product in locations exposed to constant vibrations or in special environments such as in clean rooms, vacuums, and low/high temperatures, use a lubricant suitable for its use/environment.
(4) If "-OIL" is selected in the model number coding, do not lubricate with grease.
(5) When lubricating a product having no grease nipple or lubrication hole, apply grease directly on the raceway and stroke the product several times to let the grease spread inside.
(6) The consistency of grease changes according to the temperature. Take note that the slide resistance of the LM Guide may be affected by changes in viscosity.
(7) After lubrication, the slide resistance of the LM Guide may increase due to the stirring resistance of the grease. Be sure to perform a warm-up operation and allow the grease to break in sufficiently before operating the machine.
(8) Excess grease may spatter after lubrication. Wipe off spattered grease as necessary.
(9) Grease deteriorates over time, which decreases its lubricity, so perform regular grease inspections and replenish grease based on frequency of use.
(10) The lubrication interval varies depending on the operating conditions and environment. Lubricate the system approximately every 100 km of travel distance (3 to 6 months). The final lubrication interval/amount should be set at the actual machine.
(11) The lubricant may not reach the raceway if the LM Guide is not installed in a horizontal orientation.
(12) When adopting oil lubrication, the lubricant may not be distributed throughout the LM System depending on the mounting orientation of the LM block. Contact THK for details.

Storage

When storing the LM Guide, pack it as designated by THK and store it indoors in a horizontal position away from high or low temperatures and high humidity.
Please note that if the product has been kept in storage for an extended period, the lubricant inside may have deteriorated. Please ensure that you replenish the lubricant before use.

Disposal

The product should be treated as industrial waste and disposed of appropriately.

ISO-compliant dimensions

Super-Low Waving Caged Ball LM Guide

● **"LM Guide" and "**  **" are registered trademarks of THK CO., LTD.**

- The actual products may differ from the pictures and photographs in this catalog.
- Outward appearances and specifications are subject to change without notice for the purpose of improvement. Please consult with THK before using.
- Although great care has been taken in the production of this catalog, THK will not take any responsibility for damage resulting from typographical errors or omissions.
- For exports of our products and technologies and sales for export, our basic policy is to comply with the Foreign Exchange and Foreign Trade Act and other laws and regulations. Please consult us in advance if you want to export our products by the piece.

All rights reserved

THK CO., LTD.

Global Headquarters 2-12-10 Shibaura, Minato-ku, Tokyo 108-8506 Japan

International Sales Department Phone: +81-3-5730-3860

www.thk.com

CATALOG No.441-2E ©THK CO., LTD. 202411