LM Guide Light

SHS-N

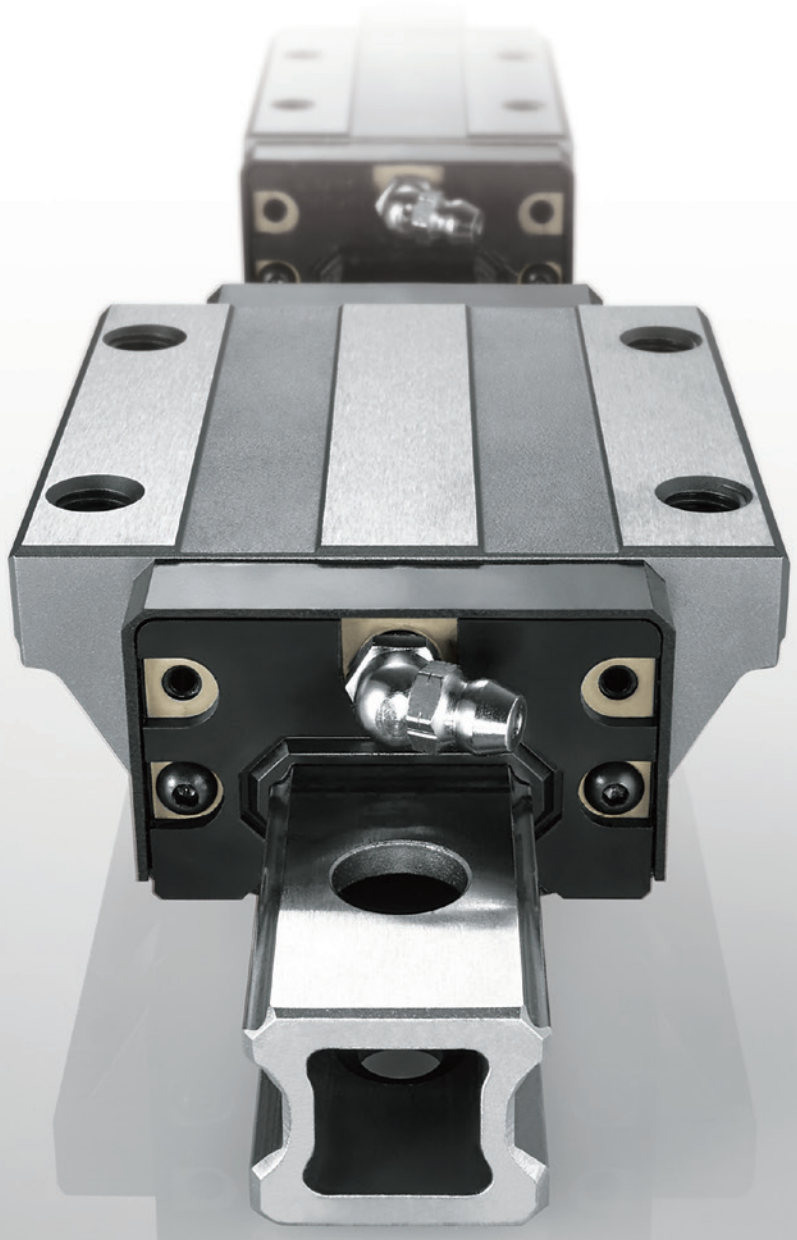

A lightweight LM rail for high-speed operations and fast takt times



A hollow, lightweight LM rail for high-speed operations and fast takt times

LM Guide Light

SHS-N

Feature 1 Lightweight

The LM rail is hollow, making the Model SHS-N much lighter than the standard Model SHS LM rail.

Feature 2 Optimal for Applications with Moving Rails

The LM rail can be used in mechanisms where the rail moves along a fixed LM block or as the upper shaft of a device to enable equipment to handle high-speed operations and fast takt times.

Main applications:
Unloading devices for injection molding machines, loaders/unloaders for lathes, CT devices for digital dental x-rays, sliding portions of airplane seats

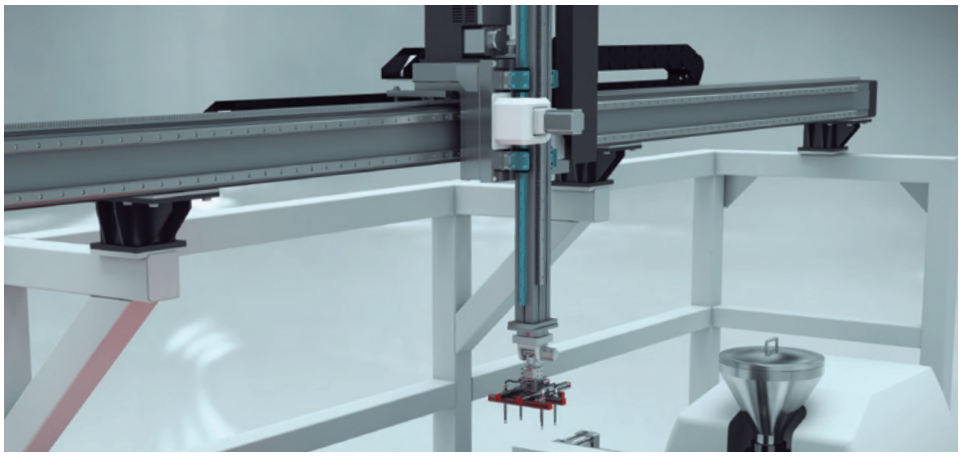

Grants greater flexibility to machine design

The lightweight, hollow rail enables greater flexibility when it comes to machine design. Whether mounted vertically or on a wall, it can improve a machine's ability to handle high-speed operations and fast takt times.

A hollow, lightweight LM rail for high-speed operations and fast takt times

Feature 1 40% Lighter than the Standard Model SHS LM Rail

The Model SHS-N is much lighter than the standard Model SHS LM rail because the rail is hollow.

Cross-Sectional Comparison between the Standard Model SHS LM Rail and Lightweight LM Rail

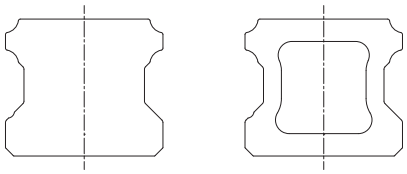

Standard LM rail　　Lightweight LM rail

Comparison of the Masses of the Standard and Lightweight LM Rails

Unit: kg/m

Model No.	LM rail type	LM rail mass	Mass comparison
SHS15-N	**Hollow**	**0.75**	**40% lighter**
SHS15	Standard	1.3	
SHS20-N	**Hollow**	**1.32**	**40% lighter**
SHS20	Standard	2.3	
SHS25-N	**Hollow**	**1.90**	**40% lighter**
SHS25	Standard	3.2	

Feature 2 Optimal for Applications with Moving Rails

With its lightweight nature, the LM rail can be used in mechanisms where the rail moves along a fixed LM block or as the upper shaft of a device to enable equipment to handle high-speed operations and fast takt times.

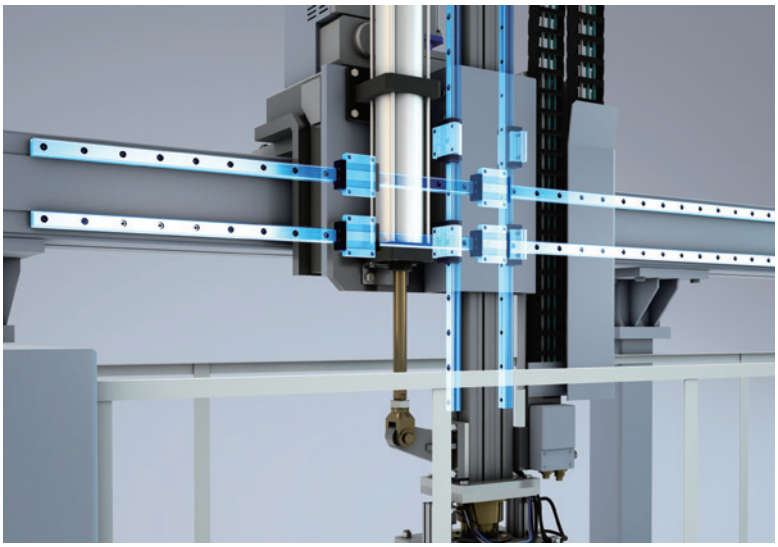

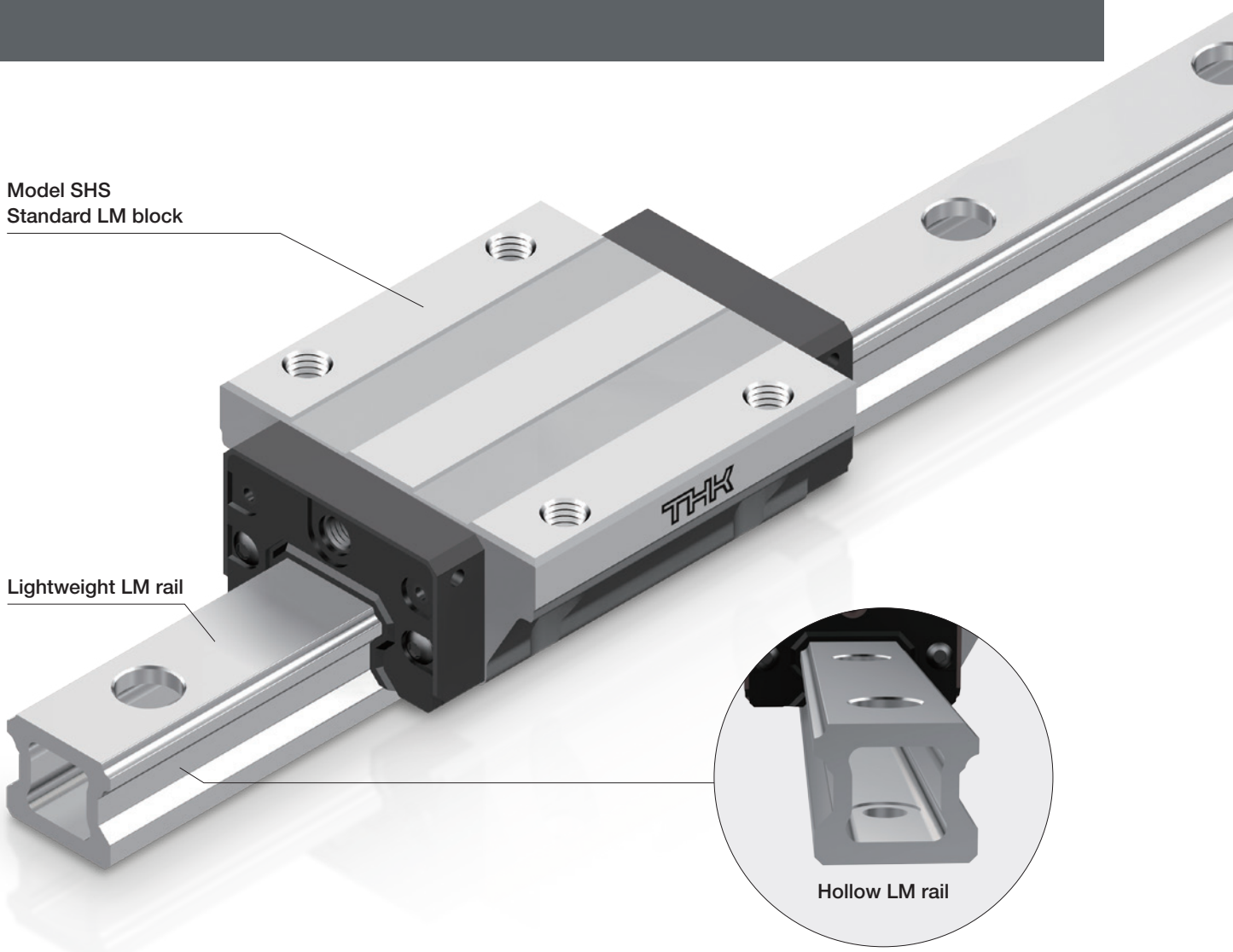

Lineup

SHS-N (C/LC Type)

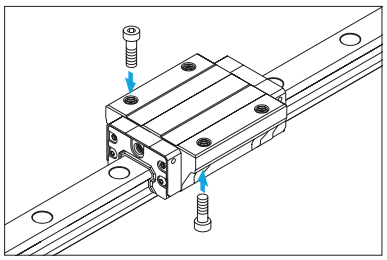

SHS-N (V/LV Type)

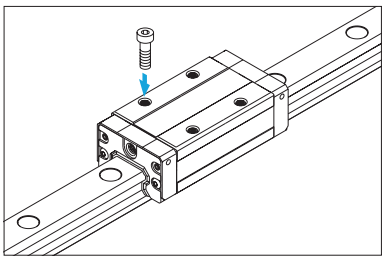

SHS-N (R/LR Type)

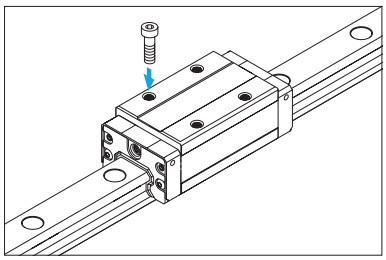

The Model SHS-N comes in three sizes ranging from 15 to 25, and a lineup of six block types* is available: C/LC, V/LV, and R/LR.

* R/LR is not available for size 20.

Block type		SHS15-N	SHS20-N	SHS25-N
Standard type	C	○	○	○
	V	○	○	○
	R	○	—	○
Long type	LC	○	○	○
	LV	○	○	○
	LR	○	—	○

Maximum Load and Maximum Moment During Use

The Model SHS-N has a set maximum load during use. The maximum moment during use is calculated based on the maximum load during use.
The maximum load and maximum moment during use are shown in the following table.

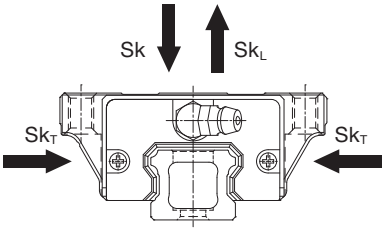

Model No.	Maximum load during use (kN)			Maximum moment during use (kN·m)*				
	Sk Radial	SkL Reverse radial	SkT Lateral	MA		MB		MC
				1 block	2 blocks	1 block	2 blocks	1 block
SHS15-N	2.21	2.21	1.75	0.016	0.085	0.013	0.067	0.016
SHS15L-N	2.90	2.90	2.30	0.028	0.134	0.022	0.106	0.021
SHS20-N	3.53	3.53	4.20	0.032	0.166	0.037	0.197	0.036
SHS20L-N	4.70	4.70	5.60	0.055	0.269	0.065	0.320	0.047
SHS25-N	4.45	4.45	2.67	0.049	0.241	0.030	0.145	0.052
SHS25L-N	5.50	5.50	3.30	0.074	0.349	0.045	0.210	0.064

Note) Maximum moment during use 1 block: Maximum moment during use with 1 LM block
2 blocks: Maximum moment during use with 2 blocks in close contact with each other

When using the Model SHS-N, do not exceed the maximum load and maximum moment during use.
Additionally, if the load applied to the Model SHS-N varies during actual use due to being struck, etc., consider a safety factor for the maximum load during use.

Service Life

The service life of the LM Guide varies from unit to unit even if they are manufactured through the same process and used in the same operating conditions. Therefore, the modified nominal life defined here is typically used as a guideline for obtaining the service life of the LM Guide.

Nominal Life

The nominal life is the total travel distance that 90% of a group of units can achieve without flaking (scale-like pieces on the metal surface peeling off) after individually running under the same conditions.

* Basic dynamic load rating (C)
Indicates the load for which the nominal life (L_{10m}) is 50 km when the load is applied with a constant direction and size to a group of identical LM Guide units individually running under the same conditions.

$$L_{10m} = \left(\frac{f_H \cdot f_T \cdot f_C}{f_W} \cdot \frac{C}{P_C}\right)^3 \times 50$$

L_{10m}: Modified nominal life (km)
C: Basic dynamic load rating* (N)
P_C: Calculated load (N)
f_H: Hardness factor
f_T: Temperature factor
f_C: Contact factor
f_W: Load factor

Service Life Time

Once the nominal life (L_{10m}) has been obtained, the service life time can be obtained using the equation shown on the right if the stroke length and the number of cycles are constant.

$$L_h = \frac{L_{10m} \times 10^6}{2 \times \ell_s \times n_1 \times 60}$$

L_h: Service life time (h)
ℓ_s: Stroke length (mm)
n_1: Cycles per minute (min^{-1})

Radial Clearance Specifications

The Model SHS-N has one type of radial clearance.
(Normal clearance (No symbol))

Radial Clearance

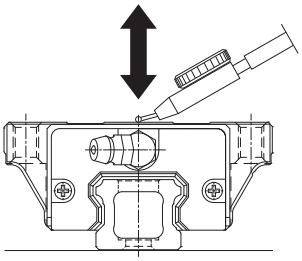

Radial Clearance Specifications Unit: μm

Model No.	Normal
	No symbol
SHS15-N	-5 to 0
SHS20-N	-6 to 0
SHS25-N	-8 to 0

Accuracy Standards

The accuracy of the LM Guide is specified for each model in terms of the dimensional tolerance for height and width, the difference between height and width in a pair, and running parallelism. (Normal grade/high accuracy grade)

Difference in Height M

The difference in height M indicates the difference between the minimum and maximum values of the height (M) of each of the LM blocks used together on the same plane.

Difference in Width W_2

The difference in width W_2 indicates the difference between the minimum and maximum values of the width (W_2) between an LM rail and each of the LM blocks mounted together on the LM rail.

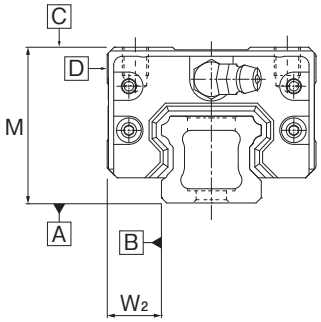

Running Parallelism

Running parallelism refers to the tolerance for parallelism between the LM block and the LM rail datum surface when the LM block travels the whole length of the LM rail with the LM rail bolted to a reference surface.

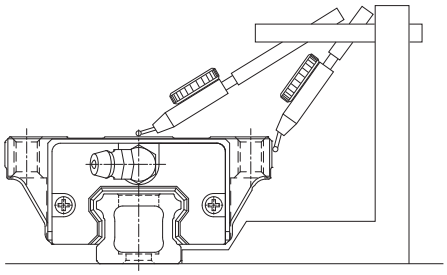

Accuracy Standards

Unit: mm

Model No.	Accuracy standards	Normal grade	High accuracy grade
	Item	No symbol	H
SHS15-N SHS20-N	Dimensional tolerance of height	±0.07	±0.03
	Difference in height M	0.02	0.01
	Dimensional tolerance of width W_2	±0.06	±0.03
	Difference in width W_2	0.02	0.01
	Running parallelism of surface C against surface A	See the table below for LM rail length and running parallelism by accuracy standard	
	Running parallelism of surface D against surface B	See the table below for LM rail length and running parallelism by accuracy standard	
SHS25-N	Dimensional tolerance of height	±0.08	±0.04
	Difference in height M	0.02	0.015
	Dimensional tolerance of width W_2	±0.07	±0.03
	Difference in width W_2	0.025	0.015
	Running parallelism of surface C against surface A	See the table below for LM rail length and running parallelism by accuracy standard	
	Running parallelism of surface D against surface B	See the table below for LM rail length and running parallelism by accuracy standard	

LM Rail Length and Running Parallelism by Accuracy Standard

Unit: μm

LM rail length (mm)		Running parallelism values	
Above	Or less	Normal grade	High accuracy grade
-	50	5	3
50	80	5	3
80	125	5	3
125	200	5	3.5
200	250	6	4
250	315	7	4.5
315	400	8	5
400	500	9	6
500	630	11	7
630	800	12	8.5
800	1000	13	9
1000	1250	15	11
1250	1600	16	12
1600	2000	18	13
2000	2500	20	14
2500	3000	21	16

Lubrication

Standard Grease

AFB-LF Grease is a general-purpose grease that provides excellent extreme pressure resistance and mechanical stability through the use of a refined mineral oil base oil and a lithium-based consistency enhancer.

* Non-standard greases are also available. Contact THK for details.

AFB-LF Representative Physical Properties

Item		Representative physical property	Testing method
Consistency enhancer		Lithium-based	
Base oil		Refined mineral oil	
Base oil kinematic viscosity: mm^2/s (40˚C)		170	JIS K 2220 23
Worked penetration (25˚C, 60 W)		275	JIS K 2220 7
Mixing stability (100,000 W)		345	JIS K 2220 15
Dropping point: ˚C		193	JIS K 2220 8
Evaporation volume: mass% (99˚C, 22 h)		0.4	JIS K 2220 10
Oil separation rate: mass% (100˚C, 24 h)		0.6	JIS K 2220 11
Copper plate corrosion (B method, 100˚C, 24 h)		Passed	JIS K 2220 9
Low-temperature torque: mN·m (-20˚C)	Starting	130	JIS K 2220 18
	Rotational	51	
4-ball testing (welding load): N		3089	ASTM D2596
Operating temperature range: ˚C		-15 to 100	
Color		Yellowish brown	

Dimensional Tables

SHS-N (C/LC)

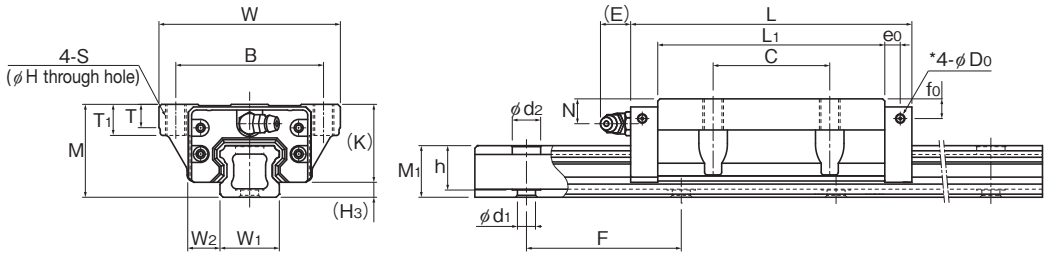

Unit: mm

Model No.	External dimensions			LM block dimensions													Grease nipple	H3
	Height M	Width W	Length L	B	C	S	H	L1	T	T1	K	N	E	e0	f0	D0		
SHS15C-N	24	47	64.4	38	30	M5	4.4	48	5.9	8	21	5.5	5.5	4	4	3	PB1021B	3
SHS15LC-N			79.4					63										
SHS20C-N	30	63	79	53	40	M6	5.4	59	7.2	10	25.4	6.5	12	4.3	5.3	3	B-M6F	4.6
SHS20LC-N			98					78										
SHS25C-N	36	70	92	57	45	M8	6.8	71	9.1	12	30.2	7.5	12	4.5	5.5	3	B-M6F	5.8
SHS25LC-N			109					88										

Model No.	LM rail dimensions						Basic dynamic load rating	Maximum load during use (kN)			Maximum moment during use* (kN·m)						Weight	
	Width W1 0 -0.05	W2	Height M1	Pitch F	d1 × d2 × h	Length* Max	C (kN)	Sk	SkL	SkT	MA 1 block	MA 2 blocks	MB 1 block	MB 2 blocks	MC 1 block		LM block (kg)	LM rail (kg/m)
SHS15C-N	15	16	13	60	4.5 × 7.5 × 11.3	2000	14.2	2.21	2.21	1.75	0.016	0.085	0.013	0.067	0.016		0.23	0.75
SHS15LC-N							17.2	2.90	2.90	2.30	0.028	0.134	0.022	0.106	0.021		0.29	
SHS20C-N	20	21.5	16.5	60	6 × 9.5 × 14.2	3000	22.3	3.53	3.53	4.20	0.032	0.166	0.037	0.197	0.036		0.46	1.32
SHS20LC-N							28.1	4.70	4.70	5.60	0.055	0.269	0.065	0.320	0.047		0.61	
SHS25C-N	23	23.5	20	60	7 × 11 × 17.3	3000	31.7	4.45	4.45	2.67	0.049	0.241	0.030	0.145	0.052		0.72	1.90
SHS25LC-N							36.8	5.50	5.50	3.30	0.074	0.349	0.045	0.210	0.064		0.89	

SHS-N (V/LV)

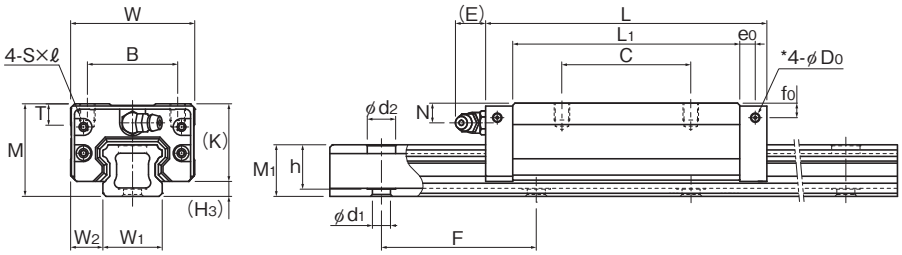

Unit: mm

Model No.	External dimensions			LM block dimensions											Grease nipple	H3
	Height M	Width W	Length L	B	C	S×ℓ	L1	T	K	N	E	e0	f0	D0		
SHS15V-N	24	34	64.4	26	26	M4×4	48	5.9	21	5.5	5.5	4	4	3	PB1021B	3
SHS15LV-N			79.4		34		63									
SHS20V-N	30	44	79	32	36	M5×5	59	8	25.4	6.5	12	4.3	5.3	3	B-M6F	4.6
SHS20LV-N			98		50		78									
SHS25V-N	36	48	92	35	35	M6×6.5	71	8	30.2	7.5	12	4.5	5.5	3	B-M6F	5.8
SHS25LV-N			109		50		88									

Model No.	LM rail dimensions						Basic dynamic load rating	Maximum load during use (kN)			Maximum moment during use* (kN·m)						Weight	
	Width W1 0 -0.05	W2	Height M1	Pitch F	d1 × d2 × h	Length* Max	C (kN)	Sk	SkL	SkT	MA 1 block	MA 2 blocks	MB 1 block	MB 2 blocks	MC 1 block		LM block (kg)	LM rail (kg/m)
SHS15V-N	15	9.5	13	60	4.5 × 7.5 × 11.3	2000	14.2	2.21	2.21	1.75	0.016	0.085	0.013	0.067	0.016		0.19	0.75
SHS15LV-N							17.2	2.90	2.90	2.30	0.028	0.134	0.022	0.106	0.021		0.22	
SHS20V-N	20	12	16.5	60	6 × 9.5 × 14.2	3000	22.3	3.53	3.53	4.20	0.032	0.166	0.037	0.197	0.036		0.35	1.32
SHS20LV-N							28.1	4.70	4.70	5.60	0.055	0.269	0.065	0.320	0.047		0.46	
SHS25V-N	23	12.5	20	60	7 × 11 × 17.3	3000	31.7	4.45	4.45	2.67	0.049	0.241	0.030	0.145	0.052		0.54	1.90
SHS25LV-N							36.8	5.50	5.50	3.30	0.074	0.349	0.045	0.210	0.064		0.67	

SHS-N (R/LR)

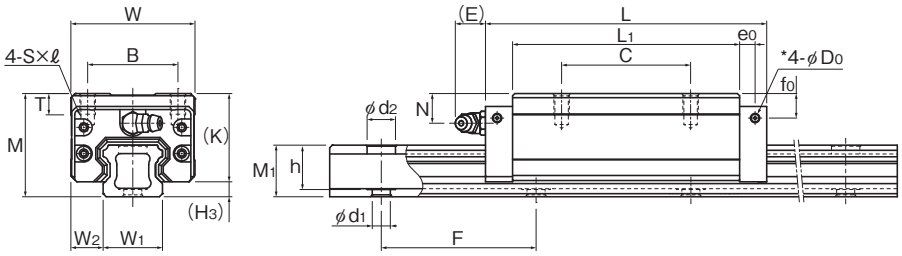

Unit: mm

Model No.	External dimensions			LM block dimensions											Grease nipple	H3
	Height M	Width W	Length L	B	C	S×ℓ	L1	T	K	N	E	e0	f0	D0		
SHS15R-N	28	34	64.4	26	26	M4×5	48	5.9	25	9.5	5.5	4	8	3	PB1021B	3
SHS25R-N	40	48	92	35	35	M6×8	71	8	34.2	11.5	12	6	9.5	3	B-M6F	5.8
SHS25LR-N			109		50		88									

Model No.	LM rail dimensions						Basic dynamic load rating	Maximum load during use (kN)			Maximum moment during use* (kN·m)					Weight	
	Width W1 0 -0.05	W2	Height M1	Pitch F	d1 × d2 × h	Length* Max	C (kN)	Sk	SkL	SkT	MA 1 block	MA 2 blocks	MB 1 block	MB 2 blocks	MC 1 block	LM block (kg)	LM rail (kg/m)
SHS15R-N	15	9.5	13	60	4.5 × 7.5 × 11.3	2000	14.2	2.21	2.21	1.75	0.016	0.085	0.013	0.067	0.016	0.22	0.75
SHS25R-N	23	12.5	20	60	7 × 11 × 17.3	3000	31.7	4.45	4.45	2.67	0.049	0.241	0.030	0.145	0.052	0.66	1.90
SHS25LR-N							36.8	5.50	5.50	3.30	0.074	0.349	0.045	0.210	0.064	0.80	

Note 1) Dimensions are interchangeable with the existing Model SHS.

Note 2) There is a seating face on the bottom of the rail. Dimension h is the distance from the rail upper face to the bottom of the mounting hole.

Note 3) Length* Max represents the current maximum length of an LM rail.

Note 4) Maximum moment during use* 1 block: Maximum moment value during use with 1 LM block
2 blocks: Maximum moment value during use with 2 LM blocks in close contact with each other

* The diagram shows the side nipple pilot holes for when a grease nipple is desired for a product with LaCS or a QZ Lubricator.
In all other cases, the side nipple pilot holes will not be through holes.
Contact THK if you desire machining for grease nipple mounting.

Model Number Coding

Select an option Fixed symbol

SHS25C | 2 | UU | + | 1000L | N | H | - | II

- SHS25C: Model No.
- 2: Number of LM blocks on one rail
- UU: Contamination protection accessory symbol (based on the standard Model SHS)
- 1000L: LM rail length (in mm)
- N: Lightweight LM rail symbol
- H: Accuracy symbol: Normal grade (no symbol) High accuracy grade (H)
- II: Symbol for number of rails used on the same plane

* The radial clearance is normal clearance (no symbol).
* This product is not intended for joint use.

Standard and Maximum Lengths of the LM Rail

The standard and maximum lengths of Model SHS-N LM rails are shown in the following table.
For special rail lengths, it is recommended to use a value corresponding to the G, g dimensions from the table. As the G, g dimensions increase, that portion becomes less stable, and the accuracy may be negatively affected.

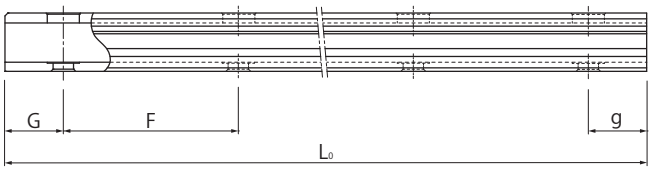

Standard and Maximum Lengths of the LM Rail Unit: mm

Model No.	SHS15-N	SHS20-N	SHS25-N
LM rail standard length (L_0)	160	160	220
	220	220	280
	280	280	340
	340	340	400
	400	400	460
	460	460	520
	520	520	580
	580	580	640
	640	640	700
	700	700	760
	760	760	820
	820	820	940
	940	940	1000
	1000	1000	1060
	1060	1060	1120
	1120	1120	1180
	1180	1180	1240
	1240	1240	1300
	1360	1360	1360
	1480	1480	1420
	1600	1600	1480
		1720	1540
		1840	1600
		1960	1720
		2080	1840
		2200	1960
			2080
			2200
			2320
			2440
Standard pitch F	60	60	60
G, g	20	20	20
Maximum length	2000	3000	3000

Shoulder Height of the Mounting Base and the Corner Radius

The LM rail and LM block ordinarily have a reference surface on the side face to allow easy installation and highly accurate positioning. The corner of the mounting shoulder must be machined to have a recess, or machined to be smaller than the corner radius r, to prevent interference with the chamfer of the LM rail or the LM block.

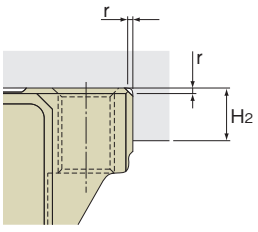

LM block

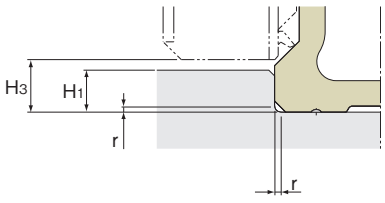

LM rail

Unit: mm

Model No.	Corner radius r (max)	LM rail shoulder height H_1	LM block shoulder height H_2	H_3
SHS15-N	0.5	2.5	4	3
SHS20-N	0.5	3.5	5	4.6
SHS25-N	1	5	5	5.8

The Model SHS-N adopts the same specifications as the standard Model SHS.
For details, see the corresponding page of the general catalog.
■ Equivalent load ■ Error allowance in the vertical level between two rails
■ Error allowance in parallelism between two rails ■ Accessories

Handling

(1) Please use at least two people to move any product weighing 20 kg or more, or use a dolly or another method of conveyance. Otherwise, it may cause injury or damage the unit.
(2) Do not disassemble the parts. This may result in loss of functionality.
(3) Tilting an LM block or LM rail may cause it to fall by its own weight.
(4) Take care not to drop or strike the LM Guide. Otherwise, it may cause injury or damage the unit. Even if there is no outward indication of damage, a sudden impact could prevent the unit from functioning properly.
(5) When installing the LM Guide, be sure not to remove the LM block from the LM rail.
(6) Placing a hand inside the LM rail mounting hole may lead to the hand being caught between the block and rail and cause injury.
(7) Wear appropriate safety gear, such as protective gloves and safety shoes, when handling the product.

Precautions on Use

(1) Prevent foreign materials, such as cutting chips or coolant, from entering the product. Failure to do so could damage the product.
(2) Prevent foreign materials, such as cutting chips, coolant, corrosive solvents, or water from getting in the product by using a bellows or cover when the product is used in an environment where such a thing is likely.
(3) Do not use this product if the external temperature exceeds 80° C. If used in excess of this temperature, there is a risk that the resin and rubber parts may deform or become damaged (except the heat-resistant type).
(4) If foreign materials such as cutting chips adhere to the product, replenish the lubricant after cleaning the product.
(5) Very small strokes can inhibit the formation of an oil film between the raceways and the area of contact for the balls, resulting in fretting. Therefore, be sure to use a type of grease with high fretting resistance properties if the stroke will be small. We recommend periodically allowing the LM block to stroke a distance roughly equal to its length to help ensure that a film forms between the raceways and balls.
(6) Do not forcibly drive a pin, key, or other positioning device into the product. This could create indentations on the raceways and impair the product's function.
(7) If the operation requires the LM block to be removed from the LM rail, please use a removing/mounting jig. (The removing/mounting jig is not provided as standard. To obtain one, contact THK.)
(8) When using a removing/mounting jig, align the ends of the LM rail and the jig and mount the block when the jig and rail are parallel.
(9) Mounting the block while it is tilted can lead to contamination by foreign materials, damage to internal components, or dropped balls.
(10) Inserting and using the LM block on the LM rail while balls are missing could lead to premature failure of the product.
(11) If any balls fall out of the LM block, contact THK. Do not use the product in that condition.
(12) If the LM Guide breaks due to an accident or another cause, the LM block may become dislodged from the LM rail and fall. For the safe use of these products, take precautions such as adding a mechanism to prevent blocks from falling.
(13) If the mounting material lacks sufficient rigidity or accuracy, the bearing load may be focused in one area, and bearing functionality will dramatically decrease. Therefore, carefully consider the rigidity and accuracy of the housing and base, and the strength of the securing bolts.
(14) If you will be removing the LM block from the LM rail and then replacing the block, an LM block mounting/removing jig that facilitates such installation is available. Contact THK for details.
(15) Take care to prevent C caps and CV caps from falling when they are to be inserted into a lightweight LM rail.
(16) Foreign materials, grease, or oil may enter the hollow section of the lightweight LM rail.
(17) Do not deform the lightweight LM rail when attaching it.

Lubrication

(1) Thoroughly wipe off anti-rust oil and feed lubricant before using the product.
(2) Do not mix different lubricants. Even grease containing the same type of thickening agent may, if mixed, interact negatively due to disparate additives or other ingredients.
(3) When using the product in locations exposed to constant vibrations or in special environments such as in clean rooms, vacuums, and low/high temperatures, use a lubricant suitable for its use/environment.
(4) When lubricating products that do not feature a grease nipple or oil hole, directly coat the raceways with lubricant and perform several warm-up strokes to ensure that the grease permeates the interior.
(5) Grease viscosity can vary depending on the temperature. Please keep in mind that the LM Guide's sliding resistance may be affected by changes in viscosity.
(6) After lubrication, the sliding resistance of the LM Guide may increase due to the stirring resistance of the grease. Be sure to perform a warm-up operation and allow the grease to break in sufficiently before operating the machinery.
(7) Excess grease may spatter after lubrication. Wipe off spattered grease as necessary.
(8) Grease deteriorates over time, which decreases the lubricity, so perform regular grease inspections and replenish grease based on frequency of use.
(9) How often grease should be replenished varies depending on the usage conditions and environment. We recommend greasing the system approximately every 100 km traveled (3 to 6 months). The final greasing interval/amount should be set at the actual machine.
(10) The lubricant may not reach the raceway if the LM Guide is not installed in a horizontal orientation.
(11) When adopting oil lubrication, the lubricant may not be distributed throughout the LM system depending on the mounting orientation of the LM block. Contact THK for details.

Storage

When storing the LM Guide, pack it as designated by THK and store it indoors in a horizontal position away from high or low temperatures and high humidity.
Please note that if the product has been kept in storage for an extended period, the lubricant inside may have deteriorated. Please ensure that you replenish the lubricant before using.

Disposal

The product should be treated as industrial waste and disposed of appropriately.

Surface Treatment

Interior surfaces of the lightweight LM rail cannot be treated. Contact THK if you want to treat exterior surfaces only.

LM Guide Light **SHS-N**

●**"LM Guide" and "**  **" are registered trademarks of THK CO., LTD.**

●The actual products may differ from the pictures and photographs in this catalog.
●Outward appearances and specifications are subject to change without notice for the purpose of improvement. Please consult with THK before using.
●Although great care has been taken in the production of this catalog, THK will not take any responsibility for damage resulting from typographical errors or omissions.
●For exports of our products and technologies and sales for export, our basic policy is to comply with the Foreign Exchange and Foreign Trade Act and other laws and regulations. Please consult us in advance if you want to export our products by the piece.

All rights reserved

THK CO., LTD.

Global Headquarters 2-12-10 Shibaura, Minato-ku, Tokyo 108-8506 Japan
International Sales Department Phone: +81-3-5730-3860
www.thk.com

CATALOG No.399-5E ©THK CO., LTD. 202307