Global Standard LM Guide

HSR

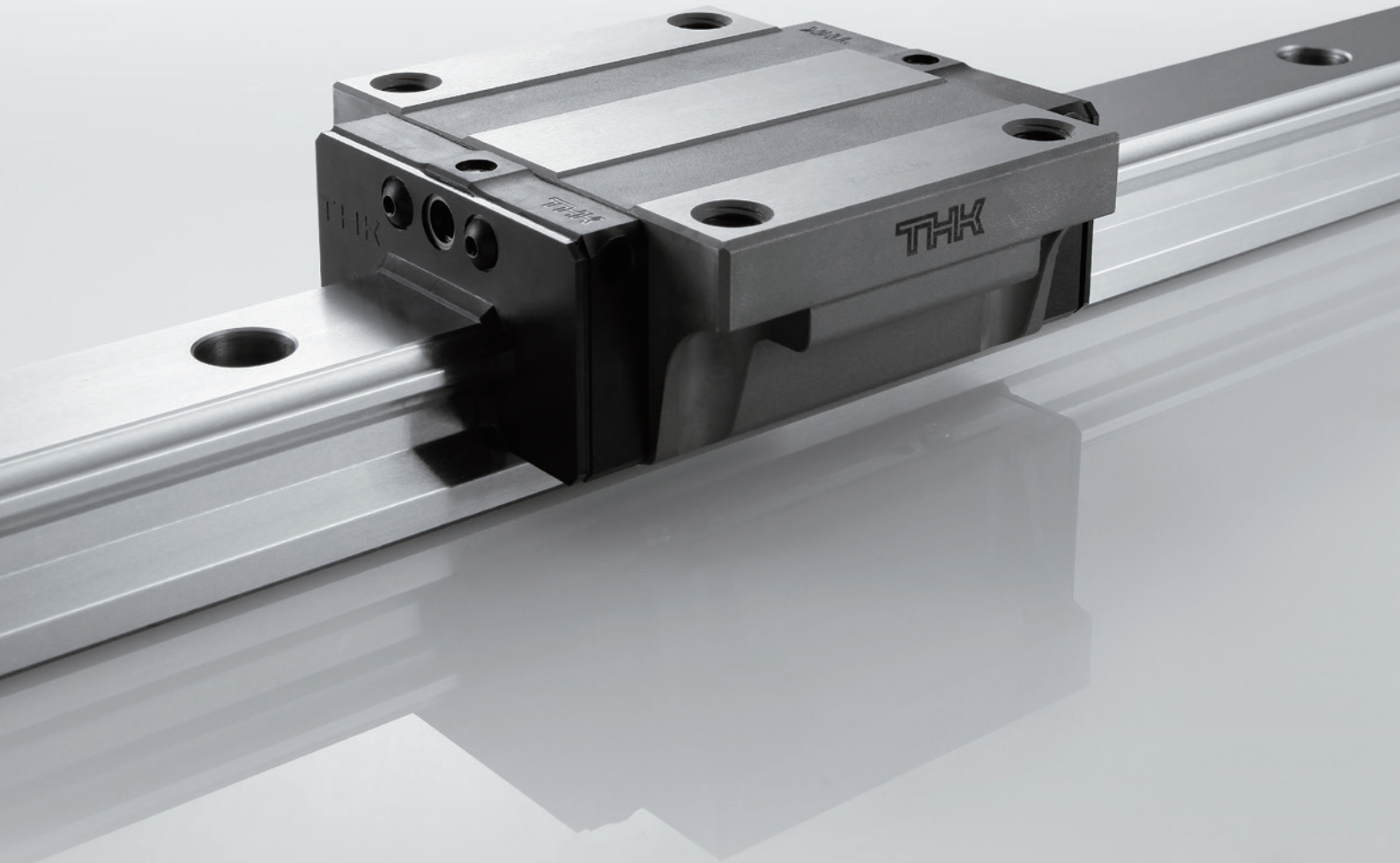

There's a reason it's a long-time bestseller

Delivering the Essence of THK

There's a reason it's a long-time bestseller.

LM GUIDE

HSR Series

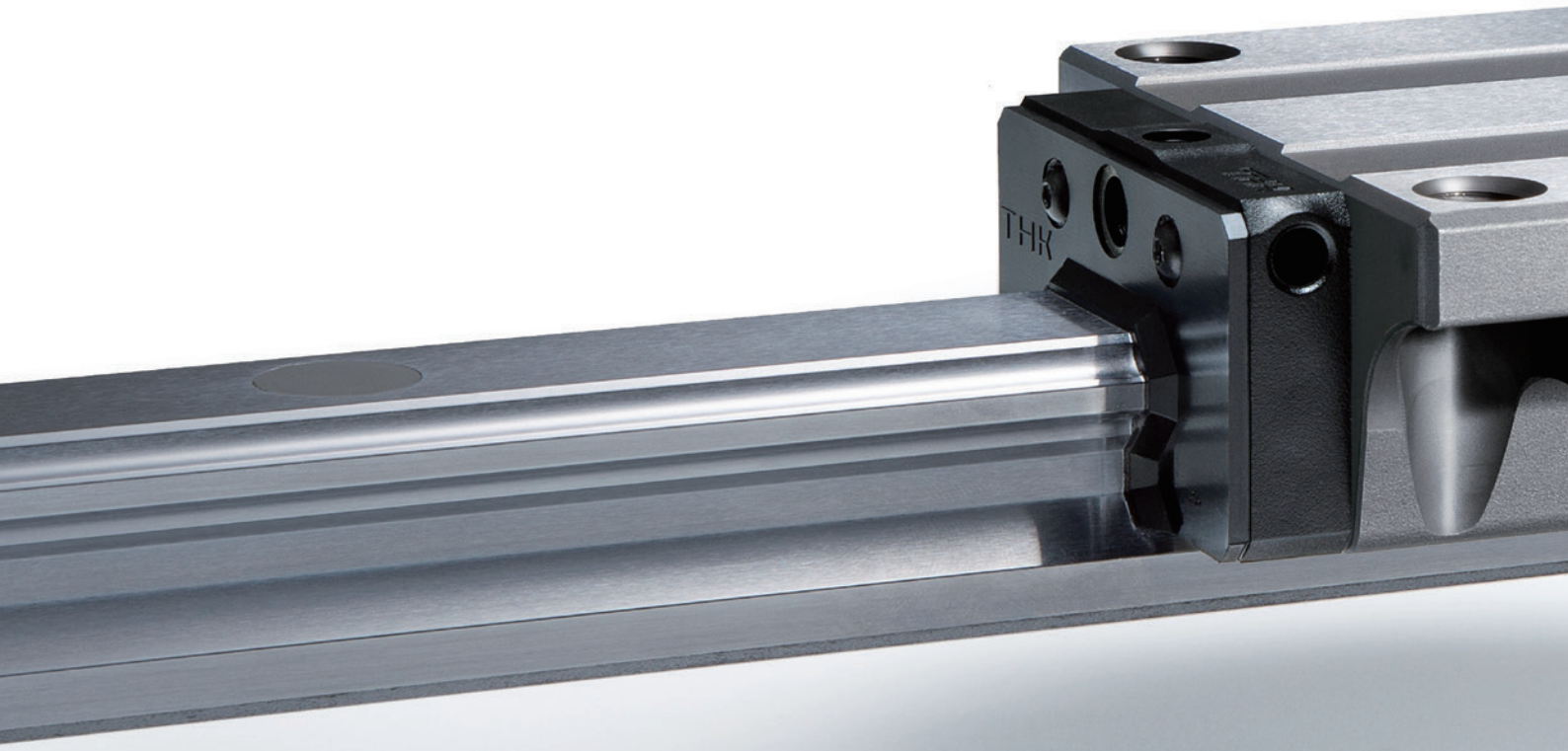

In 1972, THK introduced the world's first linear motion system, the LM (Linear Motion) Guide Model LSR. The HSR series, a 4-way equal load type LM Guide, was later developed in 1981. It has steadily won over more and more fans since it first went on the market thanks to its unprecedented robustness, load capacity, and high accuracy, as well as its efficiency and how easy it is to work with. This long-time bestselling LM Guide is now widely used in a variety of machines and devices around the world. With the HSR series, THK continues to share in the dream of revolutionizing and further developing the mechatronics industry.



Model LSR, the first LM Guide

The THK logo is a mark of reliability.

The THK logo is now stamped on the side of LM blocks and the top of end plates.
It attests to how highly reliable our products are.



WORLD QUALITY

High quality and high performance that have garnered trust worldwide since coming onto the scene.

The full-ball specification HSR has taken center stage among the different types of LM Guide. It achieves top-class quality and performance across various metrics, such as load capacity, high rigidity, automatic adjustment capabilities, durability, and low friction coefficients.
Its excellent robustness provides linear motion that is highly accurate and stable over the long term.

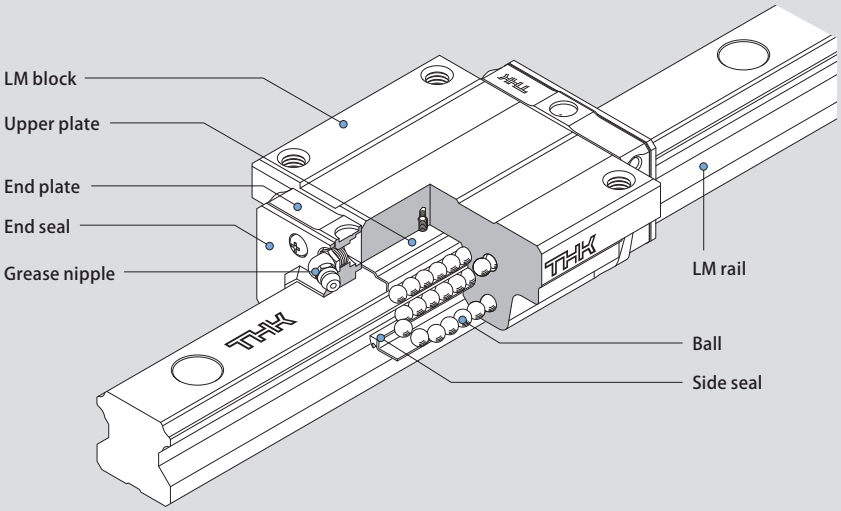

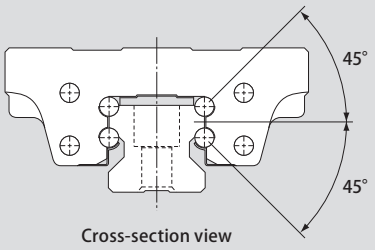

Quality Point

1 4-Way Equal Load

Each row of balls is arranged at a contact angle of 45° so that the rated load on the LM block is uniform under loads applied in four directions (radial, reverse-radial, and lateral directions).
Due to this, the HSR can be used in a variety of orientations, which expands the range of applications for which it is suitable.

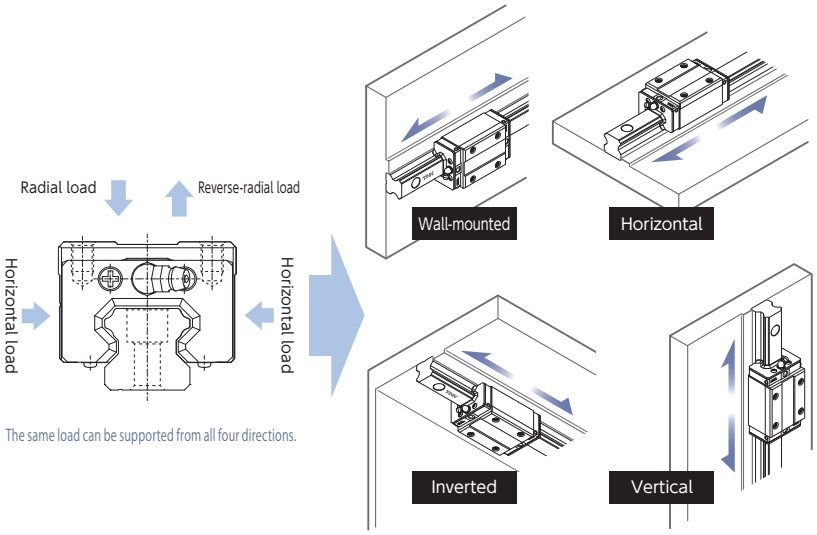

2 Automatic Adjustment Capabilities

The face-to-face arrangement of THK's unique circular arc groove (DF set) has self-adjusting capabilities. This provides smooth, high-accuracy linear motion by absorbing mounting errors.

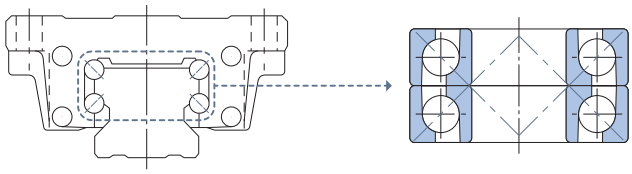

The angular contact structure of the 4-row Model DF enables a large permissible tilt angle and high self-adjustment capability.

3 Superior Durability

Balls undergo little differential slippage when rolling, even with a preload or unbalanced load applied, which enables smooth motion. Exceptional wear resistance means that the product's high degree of accuracy is maintained over the long term.

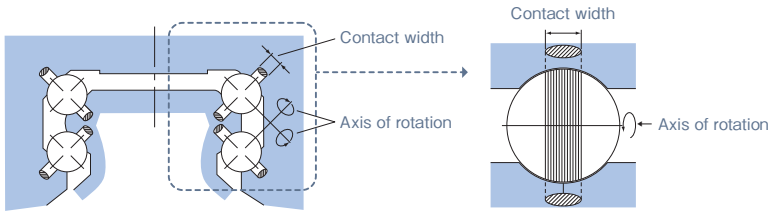

TProper rolling motion and wear resistance are maintained by keeping differential slippage low with two-point contact in the direction of a load.

4 High Rigidity Type

Since the balls are well-balanced in four rows, sufficient preload can be applied to easily increase rigidity in four directions while maintaining a low friction coefficient.

Providing globally standard, top-class quality.

The HSR series includes block shapes listed in the ISO standard that conform to ISO12090-1:2011 Rolling Bearings.

5 Globally Standard Dimensions

The HSR series was developed by THK, the pioneer of the LM Guide.
Conforming to ISO standards, it has come to define the globally standard dimensions of Full-Ball LM Guide units.

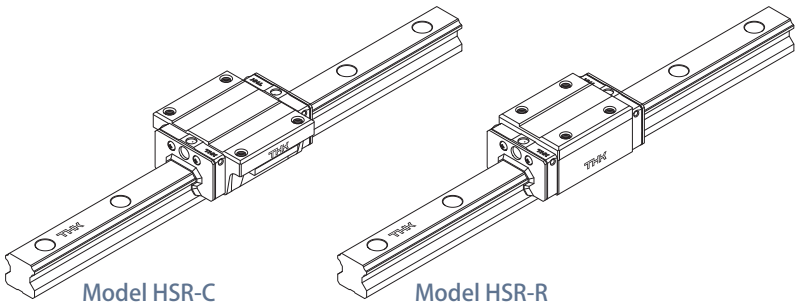

Model HSR-C　　Model HSR-R

LINE UP

An extensive lineup to meet the needs of the market.



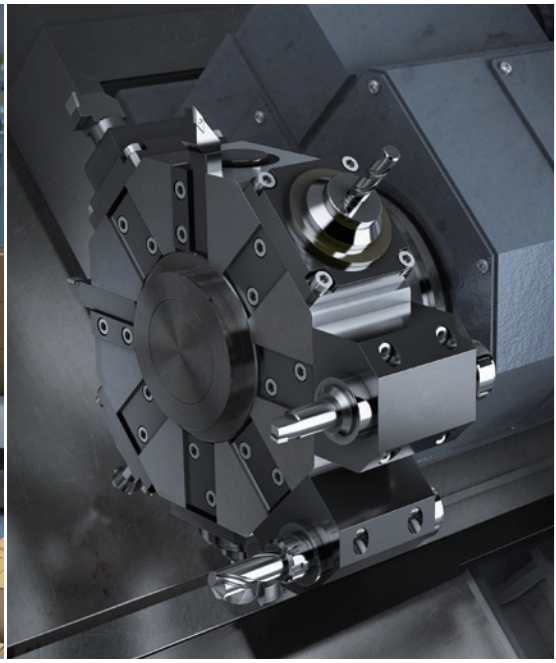

Flange type

SC/C/LC

The flanged area of the LM block has tapped holes to accommodate mounting bolts from above or below, making this a highly practical block type.
The block types available include SC (short), C (standard), and LC (long).

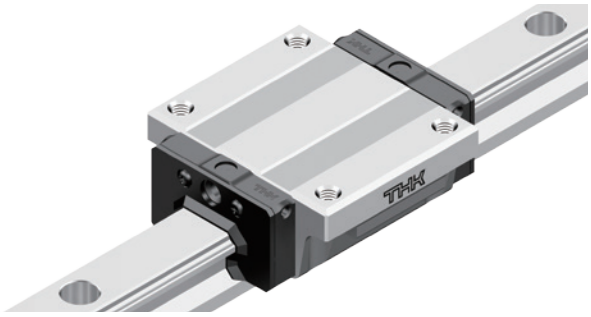

Compact type

SR/R/LR

With this type, the LM block has a smaller width (W) and tapped holes. It is ideal for compact designs.
The block types available include SR (short), R (standard), and LR (long).

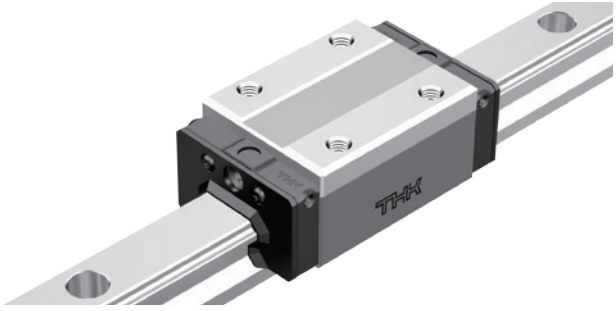

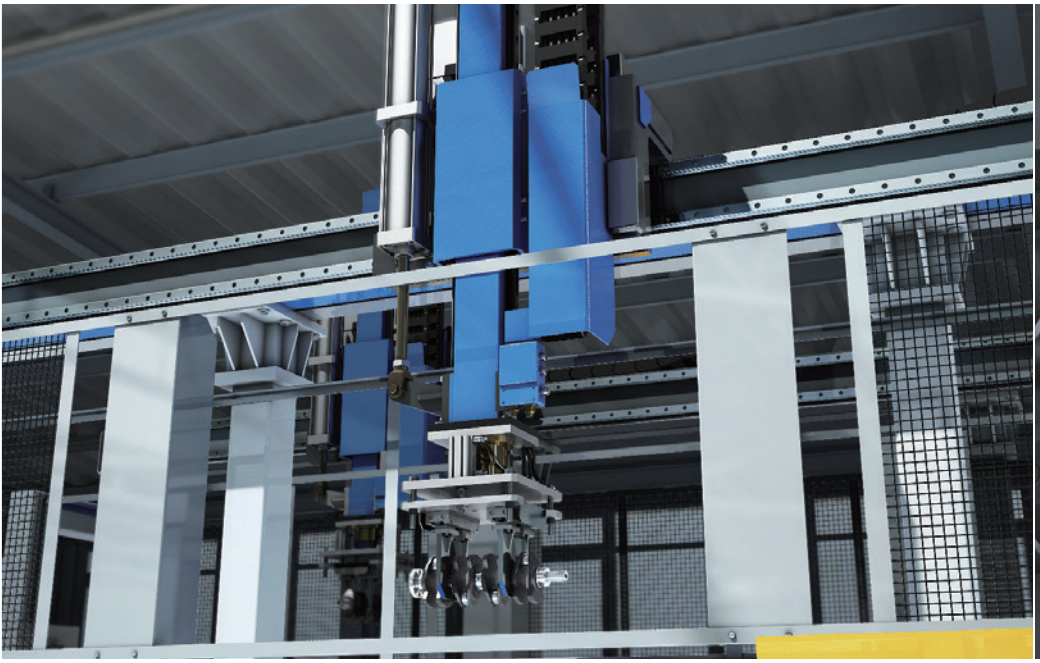



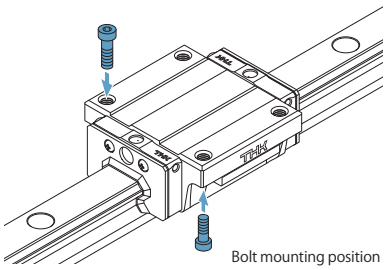

Bolt mounting position

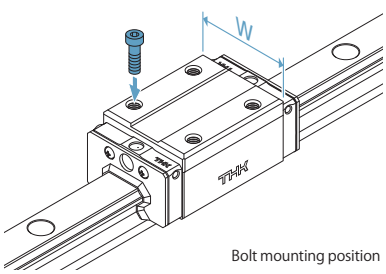

Bolt mounting position

HSR Series Lineup

Model No.	Block type					
	Flange type			Compact type		
	SC	C	LC	SR	R	LR
HSR8X	●	●	●	●	●	●
HSR10X	●	●	●	●	●	●
HSR12X	●	●	●	●	●	●
HSR15	–	○	○	–	○	○
HSR20	–	○	○	–	○	○
HSR25	–	○	○	–	○	○
HSR30	–	○	○	–	○	○
HSR35	–	○	○	–	○	○
HSR45	–	○	○	–	○	○
HSR55	–	○	○	–	○	○
HSR65X	–	○	○	–	○	○

●: Newly added ○: Existing lineup

Contamination Protection Accessories

It is necessary to prevent foreign materials from getting inside the product, as it will lead to abnormal wear and a shortened service life. If it is likely that foreign materials will get inside, it is important to select an effective sealing or contamination protection device suited to the environmental conditions.

■ Seals

End seals made of synthetic rubber that are highly resistant to wear and side seals that further improve dust-proofing effectiveness are available. Use the symbols in the table to the right to specify if you need a contamination protection accessory.

Option Compatibility

Symbol	Contamination protection accessories
UU	End seals
SS	End seals + side seals
DD	Double seals + side seals
ZZ	End seals + side seals + metal scrapers
KK	Double seals + side seals + metal scrapers

Note: 8X, 10X, and 12X are only available with UU or SS.

End Seal

Used in locations exposed to dust

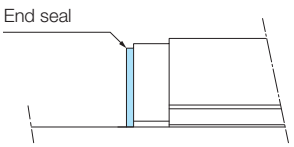

Side Seal

Used in locations where dust may enter the LM block from the side or bottom surfaces, such as vertical, horizontal, and inverted configurations

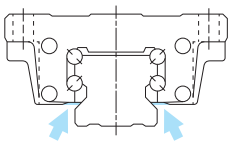

Double Seals

Used in locations exposed to excessive dust or cutting chips

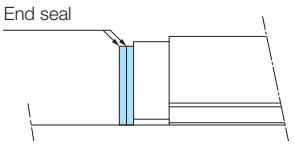

Metal Scraper (Non-Contact)

Used in locations where welding spatter may adhere to the LM rail

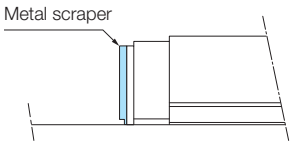

Seal Resistance Value

See the table to the right for the maximum seal resistance of UU seals per LM block when the product is lubricated.

Maximum Seal Resistance

Unit: N

Model series	Seal symbol	Maximum seal resistance
HSR8X	UU	0.24
HSR10X		0.41
HSR12X		0.64
HSR15		2.0
HSR20		2.5
HSR25		3.9
HSR30		7.8
HSR35		11.8
HSR45		19.6
HSR55		19.6
HSR65X		34.3

■ Laminated Contact Scraper LaCS Compatible sizes: 15 to 65X

For locations with an adverse environment, Laminated Contact Scraper LaCS is available. LaCS removes minute foreign material adhering to the LM rail in multiple stages and prevents it from entering the LM block with a laminated contact structure (3-layer scraper).

Option Compatibility

Symbol	Contamination protection accessories
SSHH	End seals + side seals + LaCS
DDHH	Double seals + side seals + LaCS
ZZHH	End seals + side seals + metal scrapers + LaCS
KKHH	Double seals + side seals + metal scrapers + LaCS

Features

- Since the three layers of scrapers fully contact the LM rail, LaCS is highly capable of removing minute foreign material.
- Low friction resistance is achieved through the use of oil-impregnated, self-lubricating synthetic foam rubber.

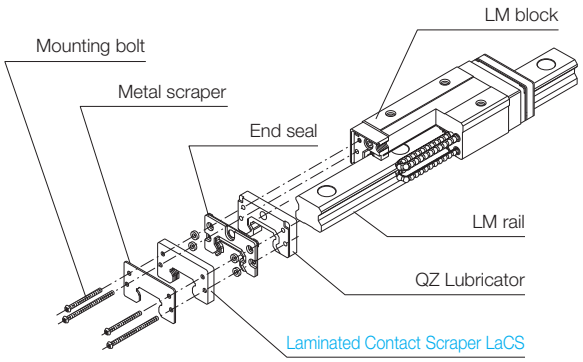

Exterior Drawing

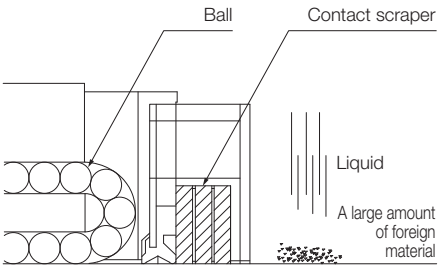

Structural Drawing

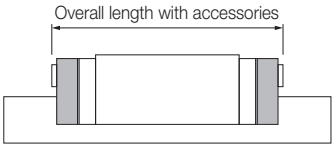

LM Block Dimension (L Dimension) with LaCS and Seals Attached

Unit: mm

Model series	UU/SS	DD	ZZ	KK	SSHH	DDHH	ZZHH	KKHH
HSR15C/R	56.6	61.8	58.2*	63.4*	76	81.2	77.2	82.4
HSR15LC/LR	74.6	79.8	76.2	81.4	94	99.2	95.2	100.4
HSR20C/R	74	80.6	76.6	83.2	92	98.6	95.2	101.8
HSR20LC/LR	90	96.6	92.6	99.2	108	114.6	111.2	117.8
HSR25C/R	83.1	90.7	86.7	94.3	101	108.6	105.3	112.9
HSR25LC/LR	102.2	109.8	105.8	113.4	120.1	127.7	124.4	132
HSR30C/R	98	105.6	101.6	109.2	119.9	127.5	124.2	131.8
HSR30LC/LR	120.6	128.2	124.2	131.8	142.5	150.1	146.8	154.4
HSR35C/R	109.4	117	113	120.6	132.4	140	135.6	143.2
HSR35LC/LR	134.8	142.4	138.4	146	157.8	165.4	161	168.6
HSR45C/R	138.9	146.1	144.1	151.3	168	175.2	171.2	178.4
HSR45LC/LR	170.7	177.9	175.9	183.1	199.8	207	203	210.2
HSR55C/R	162.9	170.1	168.1	175.3	192.6	199.8	195.8	203
HSR55LC/LR	201	208.2	206.2	213.4	230.7	237.9	233.9	241.1
HSR65XC/XR	190.5	197.7	195.3	202.5	224.3	231.5	227.5	234.7
HSR65XLC/XLR	250	257.2	254.8	262	283.8	291	287	294.2

*Grease nipple cannot be installed.

Maximum Resistance Value When LaCS is Applied

Model series	Maximum sliding resistance (N)
HSR15	3.8
HSR20	5.6
HSR25	7.5
HSR30	14.9
HSR35	22.4
HSR45	32.1
HSR55	36.5
HSR65X	43.8

Note: This represents only the resistance of the LaCS and excludes resistance from the LM block and seals.
Please contact THK about the maximum speed when using LaCS.

■ Dedicated Cap for LM Rail Mounting Holes

Using dedicated caps to cover the LM rail mounting holes helps prevent foreign material from entering the mounting holes and LM block.

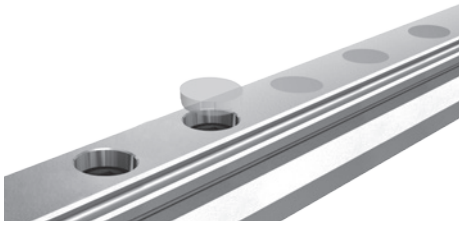

Option Compatibility

Model No.	C cap	CV cap	GC cap
HSR12X	○	–	–
HSR15	–	○	–
HSR20	–	○	○
HSR25	–	○	○
HSR30	–	○	○
HSR35	–	○	○
HSR45	–	○	○
HSR55	–	○	○
HSR65X	–	○	○

○: Available, —: Not available

CV Caps/C Caps

The caps are made of a special synthetic resin.
The CV cap is the successor to the C cap, and its new structure makes it easier to insert.

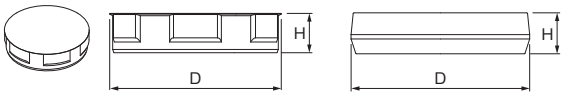

CV cap C cap

Model No.	Cap model	Bolts used	Main dimensions (mm)	
			D	H
HSR12X	C3	M3	6.3	1.2
HSR15	C4	M4	7.9	1
HSR20	CV5	M5	9.8	2.6
HSR25	CV6	M6	11.4	2.6
HSR30, HSR35	CV8	M8	14.4	3.3
HSR45	CV12	M12	20.4	3.4
HSR55	CV14	M14	23.4	5.5
HSR65X	CV16	M16	26.4	5.6

GC Caps

GC caps are made of metal. (They are RoHS compliant.)
GC caps adhere closer to the counterbore than CV caps and C caps, so there is no clearance once they are inserted.

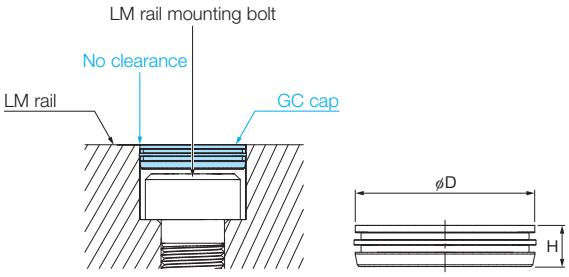

Model No.	Cap model	Bolts used	Main dimensions (mm)	
			D	H
HSR20	GC5	M5	9.86	2.5
HSR25	GC6	M6	11.36	2.5
HSR30, HSR35	GC8	M8	14.36	3.5
HSR45	GC12	M12	20.36	4.6
HSR55	GC14	M14	23.36	5
HSR65X	GC16	M16	26.36	5

Notes: GC caps are only sold with an LM Guide. They are not sold separately.
The LM Guide model number code will have "GC" at the end when it is delivered.

Model Number Coding

HSR25 LC 2 UU C0 + 1200L P GC

GC caps attached

GC caps cannot be used with LM rails that have undergone surface treatment.
LM rail mounting holes for GC caps are special. (The mouth is not chamfered.)
Be careful not to injure your hand when inserting GC caps.
Be sure to make the GC caps level with the upper surface of the LM rail and clean (wipe) that surface after insertion.
Contact THK if this product will be used in special environments such as in a vacuum or extreme heat or cold.

Lubrication

Standard Grease AFB-LF Compatible sizes: 15 to 65X

AFB-LF Grease is a general-purpose grease that provides excellent extreme pressure resistance and mechanical stability through the use of a refined mineral oil base oil and a lithium-based consistency enhancer.

Representative Physical Properties

Item		Representative property	Testing method
Consistency enhancer		Lithium-based	
Base oil		Rened mineral oil	
Base oil kinematic viscosity: mm^2/s (40°C)		170	JIS K 2220 23
Worked penetration (25°C, 60 W)		275	JIS K 2220 7
Mixing stability (100,000 W)		345	JIS K 2220 15
Dropping point: °C		193	JIS K 2220 8
Evaporation volume: mass% (99°C, 22 h)		0.4	JIS K 2220 10
Oil separation rate: mass% (100°C, 24 h)		0.6	JIS K 2220 11
Copper plate corrosion (B method, 100°C, 24 h)		Passed	JIS K 2220 9
Low-temperature torque: mN·m (-20°C)	Starting	130	JIS K 2220 18
	Rotational	51	
4-ball testing (welding load): N		3089	ASTM D2596
Operating temperature range: °C		-15 to 100	
Color		Yellowish brown	

Standard Grease AFF Compatible sizes: 8X,10X,12X

AFF Grease uses a high-grade synthetic oil for the base oil, a lithium-based consistency enhancer, and a special additive. As a result, it achieves stable rolling resistance, low dust generation, and high fretting resistance at a level that conventional vacuum greases or low dust-generating greases have not.

Representative Physical Properties

Item		Representative property	Testing method
Consistency enhancer		Lithium-based	
Base oil		High-grade synthetic oil	
Base oil kinematic viscosity: mm^2/s (40°C)		100	JIS K 2220 23
Worked penetration (25°C, 60 W)		315	JIS K 2220 7
Mixing stability (100,000 W)		345	JIS K 2220 15
Dropping point: °C		220	JIS K 2220 8
Evaporation volume: mass% (99°C, 22 h)		0.7	JIS K 2220 10
Oil separation rate: mass% (100°C, 24 h)		2.6	JIS K 2220 11
Copper plate corrosion (B method, 100°C, 24 h)		Passed	JIS K 2220 9
Low-temperature torque: mN·m (-20°C)	Starting	220	JIS K 2220 18
	Rotational	60	
4-ball testing (welding load): N		1236	ASTM D2596
Operating temperature range: °C		-40 to 120	
Color		Reddish brown	

Note: Non-standard greases are also available. Contact THK for details.

■ QZ Lubricator Compatible sizes: 15 to 65X

The QZ Lubricator feeds the right amount of lubricant to the LM rail raceway. This allows an oil film to be constantly formed between the balls and the raceway and significantly extends the lubrication maintenance interval.

Features

- Since it compensates for oil loss, the lubrication maintenance interval can be significantly extended.
- It is an eco-friendly lubrication system that does not contaminate the surrounding area, as it feeds the right amount of lubricant to the ball raceway.

The QZ Lubricator is made primarily of three components:
(1) a highly oil-impregnated fiber net (which stores lubricant)
(2) a high-density fiber net (which applies the lubricant to the raceways)
(3) an oil control plate (which adjusts the amount of oil being applied)

The lubricant is supplied from within the QZ Lubricator using the basic principle of capillary action, as used in felt-tip pens.

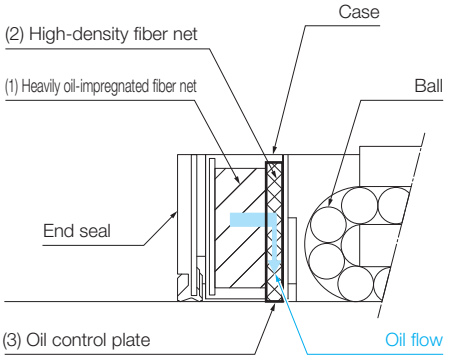

Structural Drawing

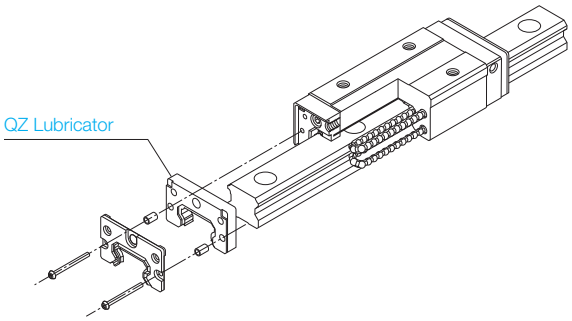

External view

Option Compatibility

Symbol	Contamination protection accessories
QZUU	End seals + QZ
QZSS	End seals + side seals + QZ
QZDD	Double seals + side seals + QZ
QZZZ	End seals + side seals + metal scrapers + QZ
QZKK	Double seals + side seals + metal scrapers + QZ
QZSSHH	End seals + side seals + LaCS + QZ
QZDDHH	Double seals + side seals + LaCS + QZ
QZZZHH	End seals + side seals + metal scrapers + LaCS + QZ
QZKKHH	Double seals + side seals + metal scrapers + LaCS + QZ

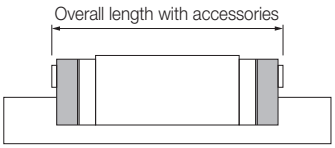

LM Block Dimension (L Dimension) with QZ Lubricator and Seals Attached

Unit: mm

Model series	QZUU	QZSS	QZDD	QZZZ	QZKK	QZSSHH	QZDDHH	QZZZHH	QZKKHH
HSR15C/R	76.6	76.6	84.6	81.2	89.2	95.8	103.8	97	105
HSR15LC/LR	94.6	94.6	102.6	99.2	107.2	113.8	121.8	115	123
HSR20C/R	93	93	101.2	98.8	107	110.4	118.6	112.8	121
HSR20LC/LR	109	109	117.2	114.8	123	126.4	134.6	128.8	137
HSR25C/R	100.9	100.9	108.9	106.6	114.6	118.2	126.2	120.6	128.6
HSR25LC/LR	120	120	128	125.7	133.7	137.3	145.3	139.5	147.7
HSR30C/R	115.8	115.8	123.8	121.5	129.5	137.1	145.1	139.5	147.5
HSR30LC/LR	138.4	138.4	146.4	144.1	152.1	159.7	167.7	162.1	170.1
HSR35C/R	129	129	138.8	135.8	145.6	151.4	161.2	153.8	163.6
HSR35LC/LR	154.4	154.4	164.2	161.2	171	176.8	186.6	179.2	189
HSR45C/R	168.5	168.5	178.3	176.7	186.5	197.4	207.2	200.6	210.4
HSR45LC/LR	200.3	200.3	210.1	208.5	218.3	229.2	239	232.4	242.2
HSR55C/R	193.4	193.4	204.6	202.1	213.3	223.4	234.6	226.6	237.8
HSR55LC/LR	231.5	231.5	242.7	240.2	251.4	261.5	272.7	264.7	275.9
HSR65XC/XR	222.7	222.7	233.9	232.5	243.7	258.3	269.5	261.5	272.7
HSR65XLC/XLR	282.2	282.2	293.4	292	303.2	317.8	329	321	332.2

Note: Grease nipples are not installed when there is a QZ Lubricator. Contact THK if you want to use a grease nipple for a model with a QZ.

Radial Clearance Specifications

The radial clearance significantly affects the running accuracy, load resistance, and rigidity. Therefore, it is necessary to select a clearance that is appropriate for the application. An appropriate radial clearance will prevent vibrations and impacts from occurring when the device is running, as well as improve the service life and accuracy of the LM Guide. The Model HSR has three types of radial clearance (preload): normal, light preload, and medium preload.

Radial clearance

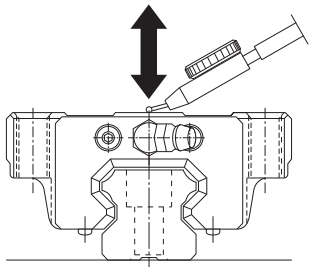

Radial Clearance Specifications Unit: μm

Model No.	Normal	Light preload	Medium preload
	No symbol	C1	C0
HSR8X	−1 to +1	−4 to −1	–
HSR10X	−2 to +2	−5 to −1	–
HSR12X	−3 to +3	−6 to −2	–
HSR15	−4 to +2	−12 to −4	–
HSR20	−5 to +2	−14 to −5	−23 to −14
HSR25	−6 to +3	−16 to −6	−26 to −16
HSR30	−7 to +4	−19 to −7	−31 to −19
HSR35	−8 to +4	−22 to −8	−35 to −22
HSR45	−10 to +5	−25 to −10	−40 to −25
HSR55	−12 to +5	−29 to −12	−46 to −29
HSR65X	−14 to +7	−32 to −14	−50 to −32

Accuracy Standards

The accuracy of the LM Guide is specified for each model in terms of the dimensional tolerance for height and width, the difference between height and width in a pair, and running parallelism.
The Model HSR has five types of accuracy standards: normal grade, high accuracy grade, precision grade, super precision grade, and ultra precision grade.

■ Difference in Height M

Indicates the difference between the minimum and maximum values of the height (M) of each LM Guide used on the same plane in combination.

■ Difference in Width W_2

Indicates a difference between the minimum and maximum values of the width (W_2) between each of the LM blocks, mounted on one LM rail in combination, and the LM rail.

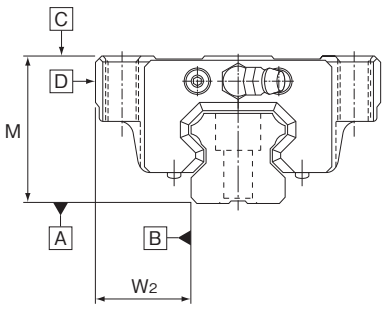

Accuracy Standards Unit: mm

Model No.	Item	Normal grade	High accuracy grade	Precision grade	Super precision grade	Ultra precision grade
		No symbol	H	P	SP	UP
8X 10X 12X	Dimensional tolerance in height M	±0.07	±0.03	±0.015	±0.007	–
	Difference in height M	0.015	0.007	0.005	0.003	–
	Dimensional tolerance in width W_2	±0.04	±0.02	±0.01	±0.007	–
	Difference in width W_2	0.02	0.01	0.006	0.004	–
	Running parallelism of surface C against surface A Running parallelism of surface D against surface B	See the table on p.13				–
15 20	Dimensional tolerance in height M	±0.07	±0.03	0 −0.03	0 −0.015	0 −0.008
	Difference in height M	0.02	0.01	0.006	0.004	0.003
	Dimensional tolerance in width W_2	±0.06	±0.03	0 −0.02	0 −0.015	0 −0.008
	Difference in width W_2	0.02	0.01	0.006	0.004	0.003
	Running parallelism of surface C against surface A Running parallelism of surface D against surface B	See the table on p.13				
25 30 35	Dimensional tolerance in height M	±0.08	±0.04	0 −0.04	0 −0.02	0 −0.01
	Difference in height M	0.02	0.015	0.007	0.005	0.003
	Dimensional tolerance in width W_2	±0.07	±0.03	0 −0.03	0 −0.015	0 −0.01
	Difference in width W_2	0.025	0.015	0.007	0.005	0.003
	Running parallelism of surface C against surface A Running parallelism of surface D against surface B	See the table on p.13				
45 55	Dimensional tolerance in height M	±0.08	±0.04	0 −0.05	0 −0.03	0 −0.015
	Difference in height M	0.025	0.015	0.007	0.005	0.003
	Dimensional tolerance in width W_2	±0.07	±0.04	0 −0.04	0 −0.025	0 −0.015
	Difference in width W_2	0.03	0.015	0.007	0.005	0.003
	Running parallelism of surface C against surface A Running parallelism of surface D against surface B	See the table on p.13				
65X	Dimensional tolerance in height M	±0.08	±0.04	0 −0.05	0 −0.04	0 −0.03
	Difference in height M	0.03	0.02	0.01	0.007	0.005
	Dimensional tolerance in width W_2	±0.08	±0.04	0 −0.05	0 −0.04	0 −0.03
	Difference in width W_2	0.03	0.02	0.01	0.007	0.005
	Running parallelism of surface C against surface A Running parallelism of surface D against surface B	See the table on p.13				

■ Running Parallelism

Refers to the tolerance for parallelism between the LM block and the LM rail datum surface when the LM block travels the whole length of the LM rail bolted to a reference surface.

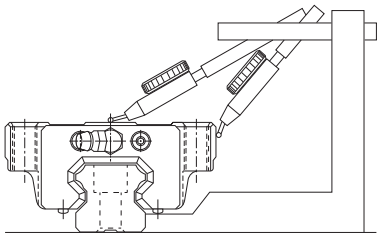

LM Rail Length and Running Parallelism by Accuracy Standard

Unit: μm

LM rail length (mm)		Running parallelism value				
Above	Or less	Normal grade	High accuracy grade	Precision grade	Super precision grade	Ultra precision grade
—	50	5	3	2	1.5	1
50	80	5	3	2	1.5	1
80	125	5	3	2	1.5	1
125	200	5	3.5	2	1.5	1
200	250	6	4	2.5	1.5	1
250	315	7	4.5	3	1.5	1
315	400	8	5	3.5	2	1.5
400	500	9	6	4.5	2.5	1.5
500	630	11	7	5	3	2
630	800	12	8.5	6	3.5	2
800	1,000	13	9	6.5	4	2.5
1,000	1,250	15	11	7.5	4.5	3
1,250	1,600	16	12	8	5	4
1,600	2,000	18	13	8.5	5.5	4.5
2,000	2,500	20	14	9.5	6	5
2,500	3,090	21	16	11	6.5	5.5

Standard and Maximum Lengths of the LM Rail

The standard and maximum lengths of Model HSR LM rails are shown in the following table. If the maximum length of the desired LM rail exceeds these values, joint rails will be used. Contact THK for details. For special rail lengths, it is recommended to use a value corresponding to the G, g dimensions from the table. As the G, g dimensions increase, that portion becomes less stable, and the accuracy may be negatively affected.

Note: If joint rails are not allowed, and a length greater than the maximum values is required, contact THK.

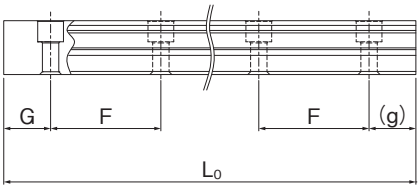

Notes: The maximum length varies with accuracy grades. Contact THK for details.

If jointed rails are not allowed and a greater length than the maximum values above is required, contact THK.

The figures in the parentheses indicate the maximum lengths of stainless steel made models.

Standard and Maximum Lengths of the LM Rail

Unit: mm

Model series	HSR8X	HSR10X	HSR12X	HSR15	HSR20	HSR25	HSR30	HSR35	HSR45	HSR55	HSR65X
LM rail standard length (L_0)	35	45	70	160	160	220	280	280	570	780	1,270
	55	70	110	220	220	280	360	360	675	900	1,570
	75	95	150	280	280	340	440	440	780	1,020	2,020
	95	120	190	340	340	400	520	520	885	1,140	2,620
	115	145	230	400	400	460	600	600	990	1,260	
	135	170	270	460	460	520	680	680	1,095	1,380	
	155	195	310	520	520	580	760	760	1,200	1,500	
	175	220	350	580	580	640	840	840	1,305	1,620	
	195	245	390	640	640	700	920	920	1,410	1,740	
	215	270	430	700	700	760	1,000	1,000	1,515	1,860	
	235	295	470	760	760	820	1,080	1,080	1,620	1,980	
	255	320	510	820	820	940	1,160	1,160	1,725	2,100	
	275	345	550	940	940	1,000	1,240	1,240	1,830	2,220	
		370	590	1,000	1,000	1,060	1,320	1,320	1,935	2,340	
		395	630	1,060	1,060	1,120	1,400	1,400	2,040	2,460	
		420	670	1,120	1,120	1,180	1,480	1,480	2,145	2,580	
		445		1,180	1,180	1,240	1,560	1,560	2,250	2,700	
		470		1,240	1,240	1,300	1,640	1,640	2,355	2,820	
				1,360	1,360	1,360	1,720	1,720	2,460	2,940	
				1,480	1,480	1,420	1,800	1,800	2,565	3,060	
				1,600	1,600	1,480	1,880	1,880	2,670		
					1,720	1,540	1,960	1,960	2,775		
					1,840	1,600	2,040	2,040	2,880		
					1,960	1,720	2,200	2,200	2,985		
					2,080	1,840	2,360	2,360	3,090		
					2,200	1,960	2,520	2,520			
						2,080	2,680	2,680			
						2,200	2,840	2,840			
						2,320	3,000	3,000			
						2,440					
Standard pitch F	20	25	40	60	60	60	60	80	105	120	150
G, g dimension	7.5	10	15	20	20	20	20	20	22.5	30	35
Maximum length	(1,000)	(1,000)	(1,480)	3,000 (1,240)	3,000 (1,480)	3,000 (2,020)	3,000 (2,520)	3,000 (2,520)	3,090	3,060	3,000

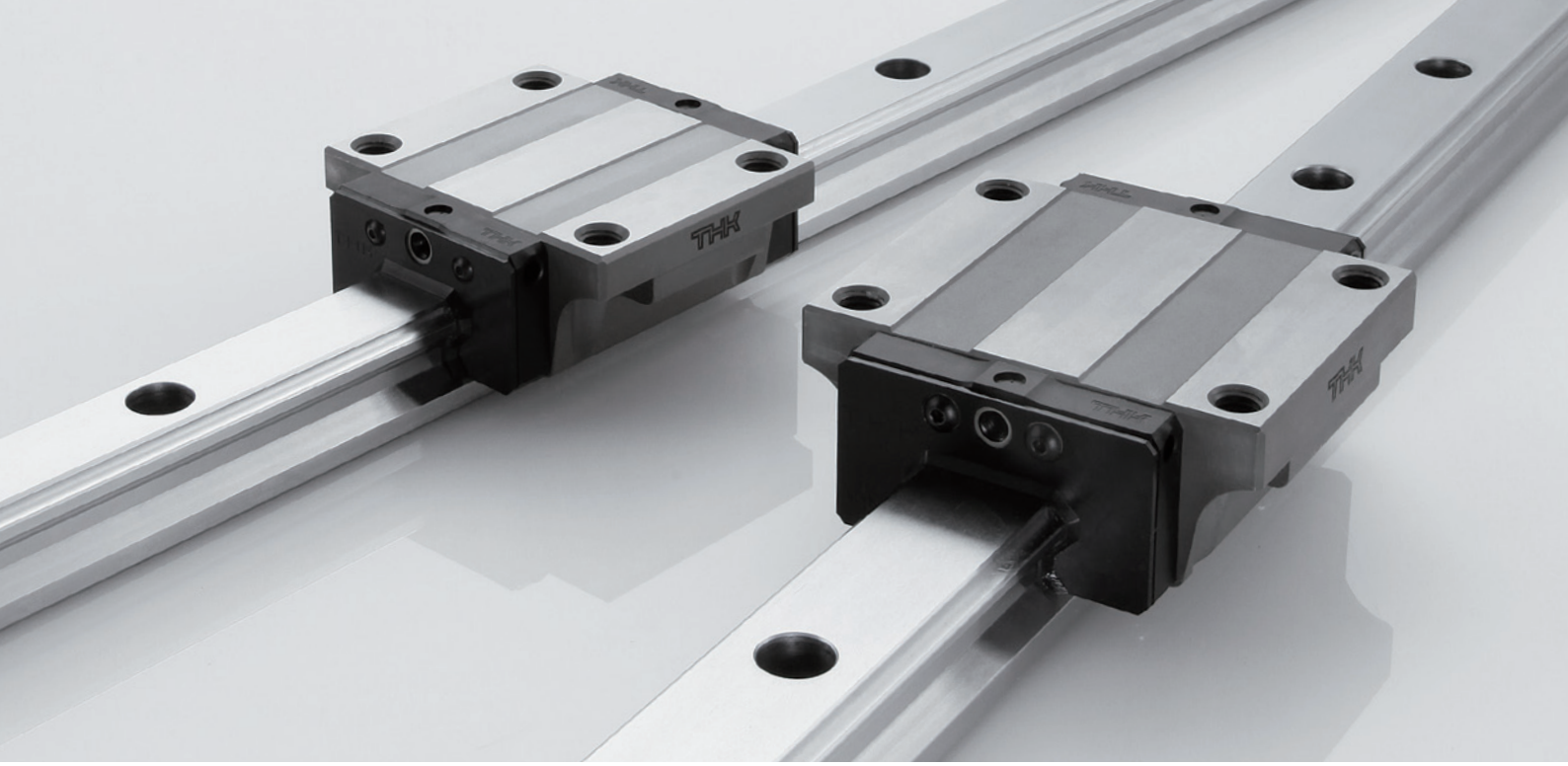

Lubrication Hole

The Model HSR allows lubrication from both the side and top faces of the LM block. Compatible sizes range from 15 to 65X. In order to prevent foreign material from entering the LM block, lubrication holes are not through holes in blocks with regular specifications. When using the lubrication hole, contact THK. When using the lubrication hole on the upper surface of models HSR-R/LR, a separate lubrication adapter is required. Contact THK for details.

The lubricant may not reach the raceway if the LM Guide is not installed in a horizontal orientation. Be sure to let THK know the mounting orientation and the exact position in each LM block where the grease nipple or the piping joint should be attached.

For details about lubrication, please see p.10 or the “Lubrication Accessories” section of the general catalog.

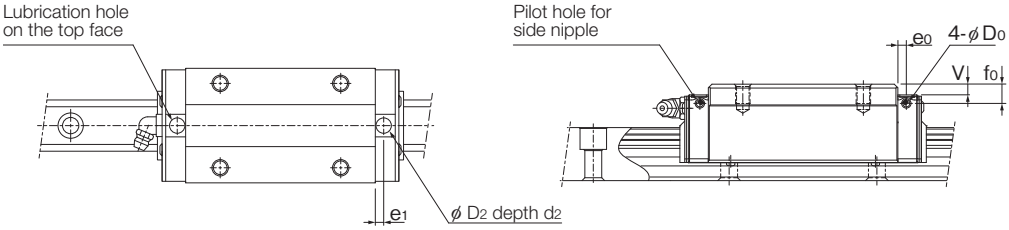

Note: Upper surface lubrication is for oil lubrication only. Contact THK if you are considering using the lubrication hole on the upper surface for grease lubrication.

Lubrication Hole for Model HSR

Unit: mm

Model No.	Pilot hole for side nipple			Applicable nipple	Lubrication hole on the top face				
	e_0	f_0	D_0		D_2	(O-ring)	V	e_1	d_2
HSR15C/LC	3.2	3.9	3	PB107	5.1	SS4	0.3	3.2	0.65
HSR15R/LR	3.2	7.9	3	PB107	5.1	SS4	4.3	3.2	0.65
HSR20C/LC	3.1	3.4	3	PB107	6	SS5	0.2	4.3	0.6
HSR20R/LR	3.1	3.4	3	PB107	6	SS5	0.2	4.3	0.6
HSR25C/LC	3.5	4	3	PB107	6.2	P3	0.4	3.9	1
HSR25R/LR	3.5	8	3	PB107	6.2	P3	4.4	3.9	1
HSR30C/LC	5.2	6.2	5.2	M6F	6.2	P3	0.4	5.2	1
HSR30R/LR	5.2	9.2	5.2	M6F	6.2	P3	3.4	5.2	1
HSR35C/LC	5.5	5.6	5.2	M6F	6.2	P3	0.4	5.5	1
HSR35R/LR	5.5	12.6	5.2	M6F	6.2	P3	7.4	5.5	1
HSR45C/LC	6.1	6.6	5.2	M6F	10.2	P7	0.4	8.2	1
HSR45R/LR	6.1	16.6	5.2	M6F	10.2	P7	10.4	8.2	1
HSR55C/LC	5.6	7.7	5.2	M6F	10.2	P7	0.4	9.1	1
HSR55R/LR	5.6	17.7	5.2	M6F	10.2	P7	10.4	9.1	1
HSR65XC/XLC	6.8	14.6	5.2	M6F	10.2	P7	5.9	9.5	1
HSR65XR/XLR	6.8	14.6	5.2	M6F	10.2	P7	5.9	9.5	1

Shoulder Height of the Mounting Base and the Corner Radius

The mounting base for the LM rail and LM block has a reference surface on the side face to allow easy installation. The height of the datum shoulder varies based on the model. See below for details. The corner of the mounting shoulder must be machined to have a recess, or machined to be smaller than the corner radius r, to prevent interference with the chamfer of the LM rail or the LM block.

The corner radius r varies based on the model. See below for details.

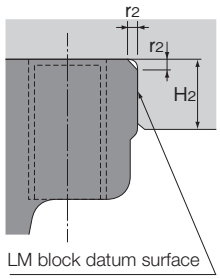

LM block

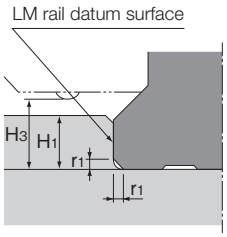

LM rail

Shoulder Height of the Mounting Base and the Corner Radius Unit: mm

Model series	LM rail corner radius r_1 (max)	LM block corner radius r_2 (max)	LM rail shoulder height H_1	LM block shoulder height H_2	H_3
HSR8X	0.3	0.5	1.6	6	2.1
HSR10X	0.3	0.5	1.7	5	2.2
HSR12X	0.8	0.5	2.6	4	3.1
HSR15	0.5	0.5	3	4	4.7
HSR20	0.5	0.5	3.5	5	4
HSR25	1	1	5	5	5.5
HSR30	1	1	5	5	7
HSR35	1	1	6	6	7.5
HSR45	1	1	8	8	10
HSR55	1.5	1.5	10	10	13
HSR65X	1.5	1.5	10	10	14

Static Safety Factor

To calculate a load applied to the LM Guide, you must first obtain the average load required to determine the service life and the maximum load needed to determine the static safety factor. In particular, if the system starts and stops frequently, if a cutting load acts on the system, or if a large moment caused by an overhanging load is applied, it may experience an unexpectedly large load. When selecting a model number, make sure that the desired model is capable of supporting the required maximum load (whether stationary or in motion).

Guidelines for the static safety factor are shown in the table to the right.

Static Safety Factor (f_S) (Guideline)

Load conditions[1]	Lower limit of f_S
Without vibrations or impacts	2 or greater
With vibrations or impacts	5 or greater

[1] In general, factors that cause vibration and impacts include acceleration and deceleration, sudden starts and stops, transmission of vibration and impacts from external devices and machines, and changes in processing force over time.

$$f_S = \frac{C_0}{P_{max}}$$

f_S: Static safety factor
C_0: Basic static load rating (N)
P_{max}: Maximum applied load (N)

Nominal Life and Service Life Time

■ Calculating the Nominal Life

The nominal life (L_{10}) is obtained from the following formulas using the basic dynamic load rating (C) and the calculated load acting on the LM Guide (P_C).
For this calculation, the basic dynamic load is to be based on a nominal life of 50 km in case of an LM Guide with balls, or 100 km in case of an LM Guide with rollers.

LM Guide with balls
(Using a basic dynamic load rating such that the nominal life will be 50 km)

$$L_{10} = \left(\frac{C}{P_C}\right)^3 \times 50$$

LM Guide with rollers
(Using a basic dynamic load rating such that the nominal life will be 100 km)

$$L_{10} = \left(\frac{C}{P_C}\right)^{\frac{10}{3}} \times 100$$

L_{10}: Nominal life (km)
C: Basic dynamic load rating (N)
P_C: Calculated load (N)

Note: These nominal life formulas may not apply if the length of the stroke is less than or equal to twice the length of the LM block.

When comparing the nominal life (L_{10}), you must take into account whether the basic dynamic load rating was defined based on 50 km or 100 km. Convert the basic dynamic load rating based on ISO 14728-1 as necessary.

ISO-regulated basic dynamic load rating conversion formulas:

• LM Guide with balls (Formula 1)

$$C_{100} = \frac{C_{50}}{1.26}$$

• LM Guide with rollers (Formula 2)

$$C_{100} = \frac{C_{50}}{1.23}$$

C_{50}: Basic dynamic load based on a nominal life of 50 km
C_{100}: Basic dynamic load based on a nominal life of 100 km

■ Calculating the Modified Nominal Life

During use, an LM Guide may be subjected to vibrations and shocks as well as fluctuating loads, which are difficult to detect. In addition, the surface hardness of the raceways, the operating temperature, and having LM blocks arranged directly behind one another will have a decisive impact on the service life. Taking these factors into account, the modified nominal life (L_{10m}) can be calculated according to the following formulas (3) and (4).

Modified factor α

$$\alpha = \frac{f_H \cdot f_T \cdot f_C}{f_W}$$

α: Modified factor
f_H: Hardness factor
f_T: Temperature factor
f_C: Contact factor
f_W: Load factor

Note: See the general catalog for details of the hardness factor, temperature factor, contact factor, and load factor.

Modified nominal life L_{10m}:

• LM Guide with balls (Formula 3)

$$L_{10m} = \left(\alpha \times \frac{C}{P_C}\right)^3 \times 50$$

• LM Guide with rollers (Formula 4)

$$L_{10m} = \left(\alpha \times \frac{C}{P_C}\right)^{\frac{10}{3}} \times 100$$

L_{10m}: Modified nominal life (km)
C: Basic dynamic load rating (N)
P_C: Calculated load (N)

Once the nominal life (L_{10}) has been obtained, the service life time can be obtained using the following formula if the stroke length and the number of cycles are constant.

$$L_h = \frac{L_{10} \times 10^6}{2 \times \ell_s \times n_1 \times 60}$$

L_h: Service life time (h)
ℓ_s: Stroke length (mm)
n_1: Cycles per minute (min^{-1})

Dimensional Table

HSR-SC/C/LC

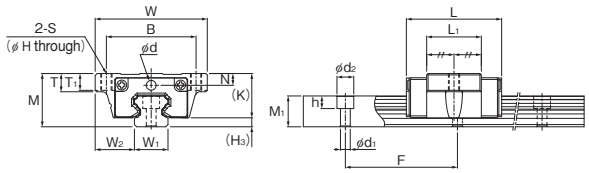

Models HSR8X and HSR10X SC

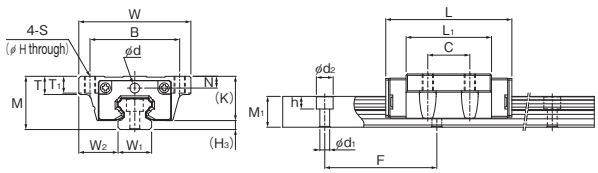

Models HSR8X and 10X C/LC

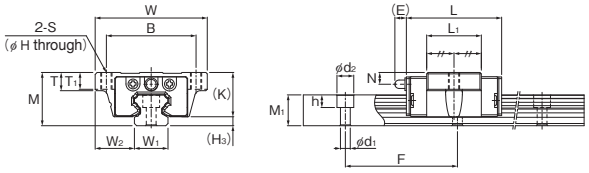

Model HSR12X SC

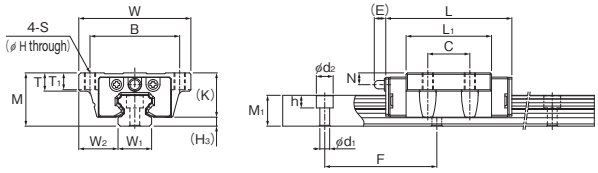

Model HSR12X C/LC

Model No.		External dimensions Height M	Width W	Length L	B	C	Mounting hole S	H	L_1	t	T	T_1	K	N	E	d	Grease nipple	Pilot hole for side nipple e_0	f_0	D_0	H_3
HSR8X	SC	10	24	18	19	–	M2.3	1.9	9	–	4	3.5	7.9	1.6	–	2.2	–	–	–	–	2.1
	C			24		10			15												
	LC			30.5					21.5												
HSR10X	SC	12	30	24	24	–	M3	2.5	13.1	–	5	4.5	9.8	2.5	–	2.2	–	–	–	–	2.2
	C			31		12			20.1												
	LC			40					29.1												
HSR12X	SC	19	40	34	32	–	M4	3.3	19.5	–	6.5	6	15.9	4.2	4	–	PB107	–	–	–	3.1
	C			45		15			30.5												
	LC			58					43.5												
HSR15	C	24	47	56.6	38	30	M5	4.4	38.8	11	7	7	19.3	4.3	5.5	–	PB1021B	3.2	3.9	3	4.7
	LC			74.6					56.8												
HSR20	C	30	63	74	53	40	M6	5.4	50.8	10	9.5	10	26	5	12	–	B-M6F	3.1	3.4	3	4
	LC			90					66.8												
HSR25	C	36	70	83.1	57	45	M8	6.8	59.5	16	11	10	30.5	6	12	–	B-M6F	3.5	4	3	5.5
	LC			102.2					78.6												
HSR30	C	42	90	98	72	52	M10	8.5	70.4	18	9	10	35	7	12	–	B-M6F	5.2	6.2	5.2	7
	LC			120.6					93												
HSR35	C	48	100	109.4	82	62	M10	8.5	80.4	21	12	13	40.5	8	12	–	B-M6F	5.5	5.6	5.2	7.5
	LC			134.8					105.8												
HSR45	C	60	120	138.9	100	80	M12	10.5	98	25	13	15	50	10	16	–	B-PT1/8	6.1	6.6	5.2	10
	LC			170.7					129.8												
HSR55	C	70	140	162.9	116	95	M14	12.5	118	29	13.5	17	57	11	16	–	B-PT1/8	5.6	7.7	5.2	13
	LC			201					156.1												
HSR65X	C	90	170	190.5	142	110	M16	14.5	138.5	37	21.5	23	76	19	16	–	B-PT1/8	6.8	14.6	5.2	14
	LC			250					198												

Model Number Coding

Select an option Fixed symbol

HSR12X C 2 UU C1 M +1200L P T M -II

- HSR12X: Model number HSR8X to 12X
- C: LM block type
- 2: Number of LM blocks used on a single rail
- UU: Contamination protection accessory symbol
- C1: Radial clearance symbol Normal (No symbol)/Light preload (C1)
- M: Stainless steel LM block
- +1200L: LM rail length (in mm)
- P: Accuracy symbol Normal grade (No symbol)/High accuracy grade (H)/ Precision grade (P)/Super precision grade (SP)
- T: Symbol for LM rail jointed use
- M: Stainless steel LM rail
- -II: Symbol for No. of rails used on the same plane

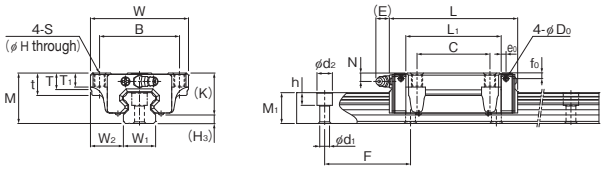

Models HSR15 to 35 C/LC

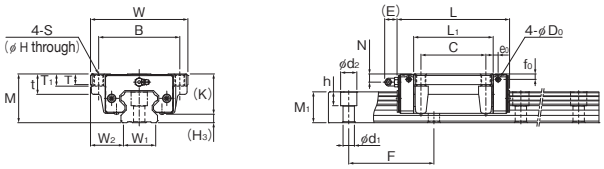

Models HSR45 to 65X C/LC

Unit: mm

LM rail dimensions					Basic load rating		Static permissible moment* (kN·m)					Mass	
Width W_1 ±0.05	W_2	Height M_1	Pitch F	Mounting hole $d_1 \times d_2 \times h$	C (kN)	C_0 (kN)	M_A 1 block	M_A 2 blocks	M_B 1 block	M_B 2 blocks	M_C 1 block	LM block (kg)	LM rail (kg/m)
8	8	6	20	2.4×4.2×2.3	0.85	1.24	0.00179	0.0148	0.00179	0.0148	0.0043	0.007	0.3
					1.2	2.02	0.00457	0.0297	0.00457	0.0297	0.00698	0.013	
					1.5	2.8	0.00913	0.0502	0.00913	0.0502	0.00964	0.018	
10	10	7	25	3.5×6×3.3	1.54	2.18	0.00464	0.0336	0.00464	0.0336	0.00949	0.017	0.45
					2.16	3.54	0.0114	0.0659	0.0114	0.0659	0.0154	0.026	
					2.72	4.9	0.0211	0.115	0.0211	0.115	0.0213	0.038	
12	14	11	40	3.5×6×4.5	3.95	5.39	0.0171	0.116	0.0171	0.116	0.0277	0.059	0.83
					5.54	8.75	0.0421	0.234	0.0421	0.234	0.0449	0.092	
					6.96	12.1	0.0781	0.409	0.0781	0.409	0.0622	0.132	
15	16	15	60	4.5×7.5×5.3	10.9	15.7	0.0945	0.527	0.0945	0.527	0.0998	0.2	1.5
					14.2	22.9	0.194	0.984	0.194	0.984	0.145	0.29	
20	21.5	18	60	6×9.5×8.5	19.8	27.4	0.218	1.2	0.218	1.2	0.235	0.35	2.3
					23.9	35.8	0.363	1.87	0.363	1.87	0.307	0.47	
23	23.5	22	60	7×11×9	27.6	36.4	0.324	1.8	0.324	1.8	0.366	0.59	3.3
					35.2	51.6	0.627	3.04	0.627	3.04	0.518	0.75	
28	31	26	80	9×14×12	40.5	53.7	0.599	3.1	0.599	3.1	0.652	1.1	4.8
					48.9	70.2	0.995	4.89	0.995	4.89	0.852	1.3	
34	33	29	80	9×14×12	53.9	70.2	0.895	4.51	0.895	4.51	1.05	1.6	6.6
					65	91.7	1.49	7.13	1.49	7.13	1.37	2.0	
45	37.5	38	105	14×20×17	82.2	101	1.5	8.37	1.5	8.37	1.94	2.8	11
					100	135	2.59	13.4	2.59	13.4	2.6	3.3	
53	43.5	44	120	16×23×20	121	146	2.6	14.1	2.6	14.1	3.43	4.5	15.1
					148	194	4.46	22.7	4.46	22.7	4.56	5.7	
63	53.5	53	150	18×26×22	195	228	5.08	25	5.08	25	6.2	8.5	22.5
					249	323	9.81	45.6	9.81	45.6	8.79	10.7	

Note: Static permissible moment* 1 block: Static permissible moment value with 1 LM block
2 blocks: Static permissible moment value with 2 LM blocks in close contact with each other

Model Number Coding

Select an option

HSR25 C 2 QZ UU C1 M +1200L P T M -II GC

- HSR25: Model number HSR15 to 65X
- C: LM block type
- 2: Number of LM blocks used on a single rail
- QZ: With QZ Lubricator
- UU: Contamination protection accessory symbol
- C1: Radial clearance symbol Normal (No symbol)/Light preload (C1)/ Medium preload (C0)
- M: Stainless steel LM block HSR15 to 35
- +1200L: LM rail length (in mm)
- P: Accuracy symbol Normal grade (No symbol)/High accuracy grade (H)/Precision grade (P)/ Super precision grade (SP)/Ultra precision grade (UP)
- T: Symbol for LM rail jointed use
- M: Stainless steel LM rail HSR15 to 35
- -II: Symbol for No. of rails used on the same plane
- GC: GC caps attached

Dimensional Table

HSR-SR/R/LR

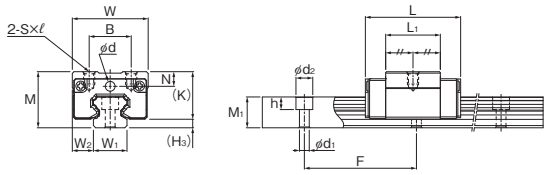

Models HSR8X and HSR10X SR

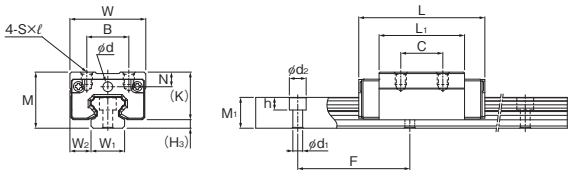

Models HSR8X and 10X R/LR

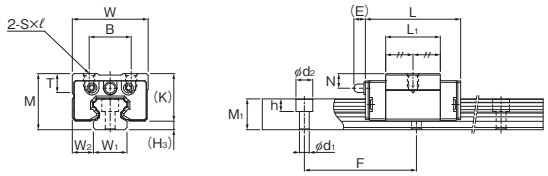

Model HSR12X SR

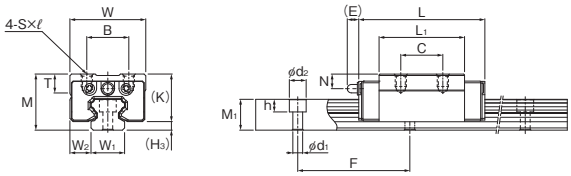

Model HSR12X R/LR

Model No.		External dimensions Height M	Width W	Length L	LM block dimensions B	C	Mounting hole S×ℓ	L1	T	K	N	E	d	Grease nipple	Pilot hole for side nipple e0	f0	D0	H3
HSR8X	SR	11	16	18	10	–	M2×2.5	9	–	8.9	2.6	–	2.2	–	–	–	–	2.1
	R			24		10		15										
	LR			30.5				21.5										
HSR10X	SR	13	20	24	13	–	M2.6×2.5	13.1	–	10.8	3.5	–	2.2	–	–	–	–	2.2
	R			31		12		20.1										
	LR			40				29.1										
HSR12X	SR	20	27	34	15	–	M4×4.5	19.5	6	16.9	5.2	4	–	PB107	–	–	–	3.1
	R			45		15		30.5										
	LR			58				43.5										
HSR15	R	28	34	56.6	26	26	M4×5	38.8	6	23.3	8.3	5.5	–	PB1021B	3.2	7.9	3	4.7
	LR			74.6		34		56.8										
HSR20	R	30	44	74	32	36	M5×6	50.8	8	26	5	12	–	B-M6F	3.1	3.4	3	4
	LR			90		50		66.8										
HSR25	R	40	48	83.1	35	35	M6×8	59.5	9	34.5	10	12	–	B-M6F	3.5	8	3	5.5
	LR			102.2		50		78.6										
HSR30	R	45	60	98	40	40	M8×10	70.4	9	38	10	12	–	B-M6F	5.2	9.2	5.2	7
	LR			120.6		60		93										
HSR35	R	55	70	109.4	50	50	M8×12	80.4	11.7	47.5	15	12	–	B-M6F	5.5	12.6	5.2	7.5
	LR			134.8		72		105.8										
HSR45	R	70	86	138.9	60	60	M10×17	98	15	60	20	16	–	B-PT1/8	6.1	16.6	5.2	10
	LR			170.7		80		129.8										
HSR55	R	80	100	162.9	75	75	M12×18	118	20.5	67	21	16	–	B-PT1/8	5.6	17.7	5.2	13
	LR			201		95		156.1										
HSR65X	R	90	126	190.5	76	70	M16×20	138.5	23	76	19	16	–	B-PT1/8	6.8	14.6	5.2	14
	LR			250		120		198										

Model Number Coding

Select an option Fixed symbol

HSR12X SR 2 UU C1 M +1200L P T M -II

- HSR12X: Model number HSR8X to 12X
- SR: LM block type
- 2: Number of LM blocks used on a single rail
- UU: Contamination protection accessory symbol
- C1: Radial clearance symbol Normal (No symbol)/Light preload (C1)
- M: Stainless steel LM block
- +1200L: LM rail length (in mm)
- P: Accuracy symbol Normal grade (No symbol)/High accuracy grade (H)/ Precision grade (P)/Super precision grade (SP)
- T: Symbol for LM rail jointed use
- M: Stainless steel LM rail
- -II: Symbol for No. of rails used on the same plane

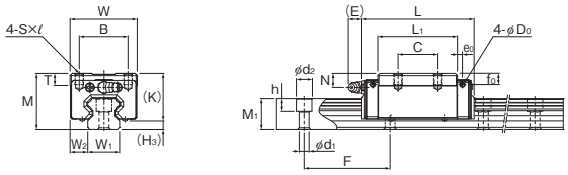

Models HSR15 to 35 R/LR

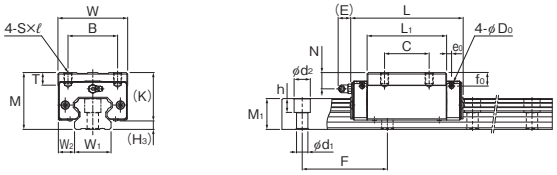

Models HSR45 to 65X R/LR

Unit: mm

	LM rail dimensions					Basic load rating		Static permissible moment* (kN·m)					Mass	
	Width W_1	W_2	Height M_1	Pitch F	Mounting hole $d_1 \times d_2 \times h$	C	C_0	M_A		M_B		M_C	LM block	LM rail
	±0.05					(kN)	(kN)	1 block	2 blocks	1 block	2 blocks	1 block	(kg)	(kg/m)
	8	4	6	20	2.4×4.2×2.3	0.85	1.24	0.00179	0.0148	0.00179	0.0148	0.0043	0.006	0.3
						1.2	2.02	0.00457	0.0297	0.00457	0.0297	0.00698	0.01	
						1.5	2.8	0.00913	0.0502	0.00913	0.0502	0.00964	0.015	
	10	5	7	25	3.5×6×3.3	1.54	2.18	0.00464	0.0336	0.00464	0.0336	0.00949	0.014	0.45
						2.16	3.54	0.0114	0.0659	0.0114	0.0659	0.0154	0.021	
						2.72	4.9	0.0211	0.115	0.0211	0.115	0.0213	0.031	
	12	7.5	11	40	3.5×6×4.5	3.95	5.39	0.0171	0.116	0.0171	0.116	0.0277	0.045	0.83
						5.54	8.75	0.0421	0.234	0.0421	0.234	0.0449	0.071	
						6.96	12.1	0.0781	0.409	0.0781	0.409	0.0622	0.102	
	15	9.5	15	60	4.5×7.5×5.3	10.9	15.7	0.0945	0.527	0.0945	0.527	0.0998	0.18	1.5
						14.2	22.9	0.194	0.984	0.194	0.984	0.145	0.26	
	20	12	18	60	6×9.5×8.5	19.8	27.4	0.218	1.2	0.218	1.2	0.235	0.25	2.3
						23.9	35.8	0.363	1.87	0.363	1.87	0.307	0.35	
	23	12.5	22	60	7×11×9	27.6	36.4	0.324	1.8	0.324	1.8	0.366	0.54	3.3
						35.2	51.6	0.627	3.04	0.627	3.04	0.518	0.67	
	28	16	26	80	9×14×12	40.5	53.7	0.599	3.1	0.599	3.1	0.652	0.9	4.8
						48.9	70.2	0.995	4.89	0.995	4.89	0.852	1.1	
	34	18	29	80	9×14×12	53.9	70.2	0.895	4.51	0.895	4.51	1.05	1.5	6.6
						65	91.7	1.49	7.13	1.49	7.13	1.37	2.0	
	45	20.5	38	105	14×20×17	82.2	101	1.5	8.37	1.5	8.37	1.94	2.6	11
						100	135	2.59	13.4	2.59	13.4	2.6	3.1	
	53	23.5	44	120	16×23×20	121	146	2.6	14.1	2.6	14.1	3.43	4.3	15.1
						148	194	4.46	22.7	4.46	22.7	4.56	5.4	
	63	31.5	53	150	18×26×22	195	228	5.08	25	5.08	25	6.2	7.3	22.5
						249	323	9.81	45.6	9.81	45.6	8.79	9.3	

Note: Static permissible moment* 1 block: Static permissible moment value with 1 LM block
2 blocks: Static permissible moment value with 2 LM blocks in close contact with each other

Model Number Coding

Select an option

HSR25 R 2 QZ UU C1 M +1200L P T M -II GC

- HSR25: Model number HSR15 to 65X
- R: LM block type
- 2: Number of LM blocks used on a single rail
- QZ: With QZ Lubricator
- UU: Contamination protection accessory symbol
- C1: Radial clearance symbol Normal (No symbol)/Light preload (C1)/ Medium preload (C0)
- M: Stainless steel LM block HSR15 to 35
- +1200L: LM rail length (in mm)
- P: Accuracy symbol Normal grade (No symbol)/High accuracy grade (H)/Precision grade (P)/ Super precision grade (SP)/Ultra precision grade (UP)
- T: Symbol for LM rail jointed use
- M: Stainless steel LM rail HSR15 to 35
- -II: Symbol for No. of rails used on the same plane
- GC: GC caps attached

Handling

(1) Please use at least two people to move any product weighing 20 kg or more, or use a cart or another method of conveyance. Otherwise, it may cause injury or damage the unit.
(2) Do not disassemble the parts. This may result in loss of functionality.
(3) Tilting an LM block or LM rail may cause them to fall by their own weight.
(4) Take care not to drop or strike the LM Guide. Otherwise, it may cause injury or damage the unit. Even if there is no outward indication of damage, a sudden impact could prevent the unit from functioning properly.
(5) Do not remove the LM block from the LM rail during setup.
(6) Placing a hand inside the LM rail mounting hole may lead to the hand being caught between the block and rail and cause injury.
(7) Wear appropriate safety gear, such as protective gloves and safety shoes, when handling the product.

Precautions on Use

(1) Prevent foreign material, such as cutting chips or coolant, from entering the product. Failure to do so could damage the product.
(2) Prevent foreign materials, such as cutting chips, coolant, corrosive solvents, or water from getting in the product by using a bellows or cover when the product is used in an environment where such a thing is likely.
(3) Do not use the product at temperatures of 80°C or higher. Unless the unit is specially designed to be heat-resistant, exposure to such temperatures may deform or damage plastic and rubber parts.
(4) If foreign materials such as cutting chips adhere to the product, replenish the lubricant after cleaning the product.
(5) Very small strokes can inhibit the formation of an oil film between the raceways and the area of contact for the balls, resulting in fretting. Therefore, be sure to use a type of grease with high fretting resistance properties if the stroke will be small. We recommend periodically allowing the LM block to stroke a distance roughly equal to its length to help ensure that a film forms between the raceways and balls.
(6) Do not forcibly drive a pin, key, or other positioning device into the product. This could create indentations on the raceway and impair the product's function.
(7) If, for operational reasons, it becomes absolutely necessary to remove the LM block from the LM rail and reattach it, a special removing/mounting jig must be used for this purpose. (The removing/mounting jig is not provided as standard. To obtain one, contact THK.)
(8) When using a removing/mounting jig, align the ends of the LM rail and the jig and mount the block when the jig and rail are parallel.
(9) Mounting the block while it is tilted can lead to contamination by foreign materials, damage to internal components, or dropped balls.
(10) Inserting and using the LM block on the LM rail while balls are missing could lead to premature failure of the product.
(11) If any balls fall out of the LM block, contact THK. Do not use the product in that condition.
(12) If the LM Guide breaks due to an accident or another cause, the LM block may become dislodged from the LM rail and fall. For the safe use of this product, take precautions such as adding a mechanism to prevent the block from falling.
(13) For the bolt length, select a length that will leave a clearance at the bolt tip in relation to the effective tap depth.
(14) If the mounting material lacks sufficient rigidity or accuracy, the bearing load can be focused in one area, and bearing functionality will dramatically decrease. Make sure the housing and base are sufficiently rigid, the anchoring bolts are strong enough, and the component is mounted correctly.
(15) When removing the LM block from the LM rail and then replacing the block, an LM block mounting/removing jig that facilitates such installation is available. Contact THK for details.

Lubrication

(1) Thoroughly remove anti-rust oil and apply lubricant before using the product.
(2) Do not mix different lubricants. Even greases containing the same type of consistency enhancer may, if mixed, interact negatively due to disparate additives or other ingredients.
(3) When using the product in locations exposed to constant vibrations or in special environments such as in clean rooms, vacuums, and low/high temperatures, use a lubricant suitable for its use/environment.
(4) When lubricating a product having no grease nipple or lubrication hole, apply grease directly on the raceway and stroke the product several times to let the grease spread inside.
(5) The consistency of grease changes according to the temperature. Take note that the slide resistance of the LM Guide may be affected by changes in viscosity.
(6) After lubrication, the slide resistance of the LM Guide may increase due to the stirring resistance of the grease. Be sure to perform a warm-up operation and allow the grease to break in sufficiently before operating the machine.
(7) Excess grease may spatter after lubrication. Wipe off spattered grease as necessary.
(8) Grease deteriorates over time, which decreases its lubricity, so perform regular grease inspections and replenish grease based on frequency of use.
(9) The lubrication interval varies depending on the operating conditions and environment. Lubricate the system approximately every 100 km of travel distance (3 to 6 months). The final lubrication interval/amount should be set at the actual machine.
(10) The lubricant may not reach the raceway if the LM Guide is not installed in a horizontal orientation.
(11) When adopting oil lubrication, the lubricant may not be distributed throughout the LM System depending on the mounting orientation of the LM block. Contact THK for details.

Storage

When storing the LM Guide, pack it as designated by THK and store it indoors in a horizontal position away from high or low temperatures and high humidity.
Please note that if the product has been kept in storage for an extended period, the lubricant inside may have deteriorated. Please ensure that you replenish the lubricant before use.

Disposal

The product should be treated as industrial waste and disposed of appropriately.

LIMITED WARRANTY

LIMITED WARRANTY AND LIMITATION OF LIABILITY: THK CO., LTD., FOR ITSELF AND ITS RELATED COMPANIES AND SUBSIDIARIES (HEREINAFTER DESCRIBED COLLECTIVELY AS "THK"), WARRANTS THAT ALL THK PRODUCTS SOLD WILL BE FREE OF DEFECTS IN MATERIALS AND WORKMANSHIP FOR A PERIOD OF TWELVE (12) MONTHS FROM DATE OF DELIVERY. THE FOREGOING TWELVE (12) MONTH WARRANTY SHALL NOT BE EXTENDED OR CHANGED BY THK FURNISHING ANY REPLACEMENTS, ADDITIONS, ATTACHMENTS, ACCESSORIES, OR REPAIRS TO THE PRODUCT SUBSEQUENT TO THE DATE OF DELIVERY OR ACCEPTANCE. THE FOREGOING WARRANTY IS THE SOLE AND EXCLUSIVE WARRANTY OF THK REGARDING THE PRODUCT.

DISCLAIMER OF OTHER WARRANTIES: OTHER THAN THE FOREGOING WARRANTY, THERE ARE NO EXPRESS OR IMPLIED WARRANTIES OR ANY AFFIRMATIONS OF FACT OR PROMISES BY THK WITH RESPECT TO THE PRODUCT. THK DISCLAIMS ANY WARRANTIES, EXPRESS, IMPLIED, OR STATUTORY, NOT SPECIFICALLY SET FORTH ABOVE. WITHOUT LIMITING THE GENERALITY OF THE FOREGOING, THK EXPRESSLY DISCLAIMS ANY IMPLIED WARRANTIES OF MERCHANTABILITY, FITNESS FOR ANY PARTICULAR PURPOSE, INFRINGEMENT, OR ANY REPRESENTATIONS OF FACT OR QUALITY NOT EXPRESSLY SET FORTH HEREIN.

LIMITATION OF LIABILITY AND REMEDIES: THK'S SOLE RESPONSIBILITY AND LIABILITY INCURRED AS A RESULT OF THE SALE AND/OR USE OF THE PRODUCT, AND THE PURCHASER'S EXCLUSIVE REMEDY AGAINST THK UNDER ANY WARRANTY, SHALL BE LIMITED TO THE REPAIR OR REPLACEMENT, AT THK'S OPTION, OF PRODUCT COMPONENTS NOT CONFORMING TO THE WARRANTY. THE TOTAL LIABILITY OF THK SHALL IN NO EVENT EXCEED THE AMOUNT ACTUALLY PAID TO THK BY PURCHASER WITH RESPECT TO THE PRODUCT. THIS LIMITATION OF REMEDY IS INTENDED BY THE PARTIES TO SURVIVE EVEN IF THE REMEDY IS CLAIMED TO HAVE FAILED OF ITS ESSENTIAL PURPOSE. PURCHASER'S FULL AND COMPLETE PERFORMANCE OF ALL OBLIGATIONS OF PURCHASER RECITED IN THIS AGREEMENT IS A CONDITION PRECEDENT TO THK'S WARRANTY OBLIGATIONS AND LIABILITIES HEREIN.

PURCHASER'S DAMAGES AND LIMITATIONS: IN NO EVENT SHALL THK BE LIABLE TO PURCHASER, ITS ASSIGNS OR AGENTS, FOR ECONOMIC LOSS, OR INCIDENTAL OR CONSEQUENTIAL DAMAGES, IN CONTRACT OR IN TORT, INCLUDING, BUT NOT LIMITED TO, ANY DAMAGES FOR LOST PROFITS, DOWN-TIME, LOST PRODUCTION, FAILURE TO MEET PURCHASER'S SALES CONTRACTS, OR DEFECTS IN PURCHASER'S MATERIALS OR WORKMANSHIP ARISING DIRECTLY OR INDIRECTLY FROM THE USE OF THE PRODUCT.

DISCLAIMER

This Catalog provides basic information relating to THK linear motion and related products. The Catalog, including all information, charts, formulas, factors, accuracy standards, tolerances, and application recommendations contained herein, is only a starting point for the customer's selection of appropriate products, and may not apply in all intended applications. The Catalog is not a substitute for a proper application analysis conducted by an experienced, knowledgeable design engineer. Product selection should be based upon your specific application needs and conditions, which will vary greatly depending on many factors. No specific product application should be based solely on the information contained in this Catalog. All purchases of THK products are subject to the limited warranty offered by THK CO., LTD. for itself and on behalf of its related companies and subsidiaries. Customers should confirm independently that a contemplated application is safe, appropriate, and effective.

All trademarks used in this Catalog are registered trademarks in the country of Japan. If there is any question as to the validity of such trademarks outside of Japan, an inquiry should be made in that particular country.

Recommended Products

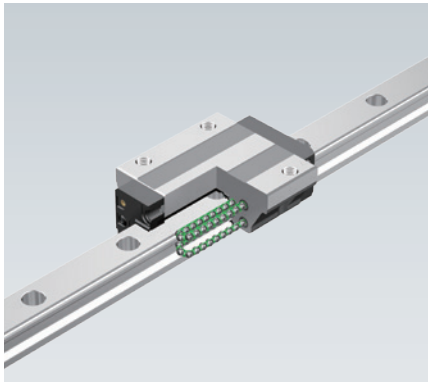

Caged Ball LM Guide
SHS

- ○ Globally standard dimensions.
- ○ It can bear loads in four directions, enabling use in various different orientations.
- ○ The ball cage enables a long service life and long-term maintenance-free operation.
- ○ Sizes range from 15 to 65, with 6 block types for a total lineup of 43 products.

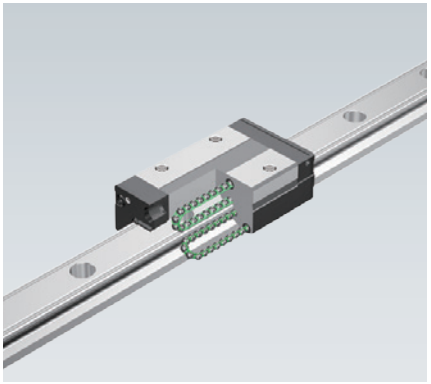

Caged Ball LM Guide
SSR

- ○ Optimized for horizontal guides due to superb planar running accuracy.
- ○ The ball cage enables long-term maintenance-free operation.
- ○ Sizes range from 15 to 35, with 4 block types for a total lineup of 11 products.

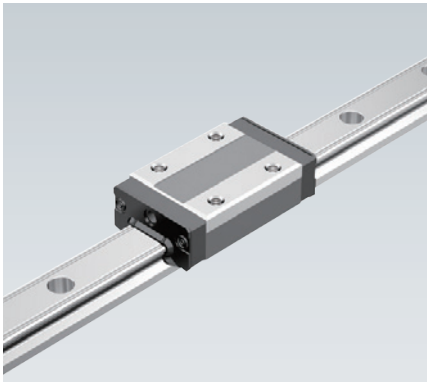

LM Guide
SR

- ○ Optimized for horizontal guides due to superb planar running accuracy.
- ○ Sizes range from 15 to 150, with 4 block types for a total lineup of 29 products.

Global Standard LM Guide **HSR**

● **"LM Guide" and "** **" are registered trademarks of THK CO., LTD.**

- ● The actual products may differ from the pictures and photographs in this catalog.
- ● Outward appearances and specifications are subject to change without notice for the purpose of improvement. Please consult with THK before using.
- ● Although great care has been taken in the production of this catalog, THK will not take any responsibility for damage resulting from typographical errors or omissions.
- ● For exports of our products and technologies and sales for export, our basic policy is to comply with the Foreign Exchange and Foreign Trade Act and other laws and regulations. Please consult us in advance if you want to export our products by the piece.

All rights reserved

THK CO., LTD.

Global Headquarters 2-12-10 Shibaura, Minato-ku, Tokyo 108-8506 Japan
International Sales Department Phone: +81-3-5730-3860
www.thk.com

CATALOG No.440E ©THK CO., LTD. 202408