NEW

Low-Magnetic Permeability LM Guide

HSR-M3

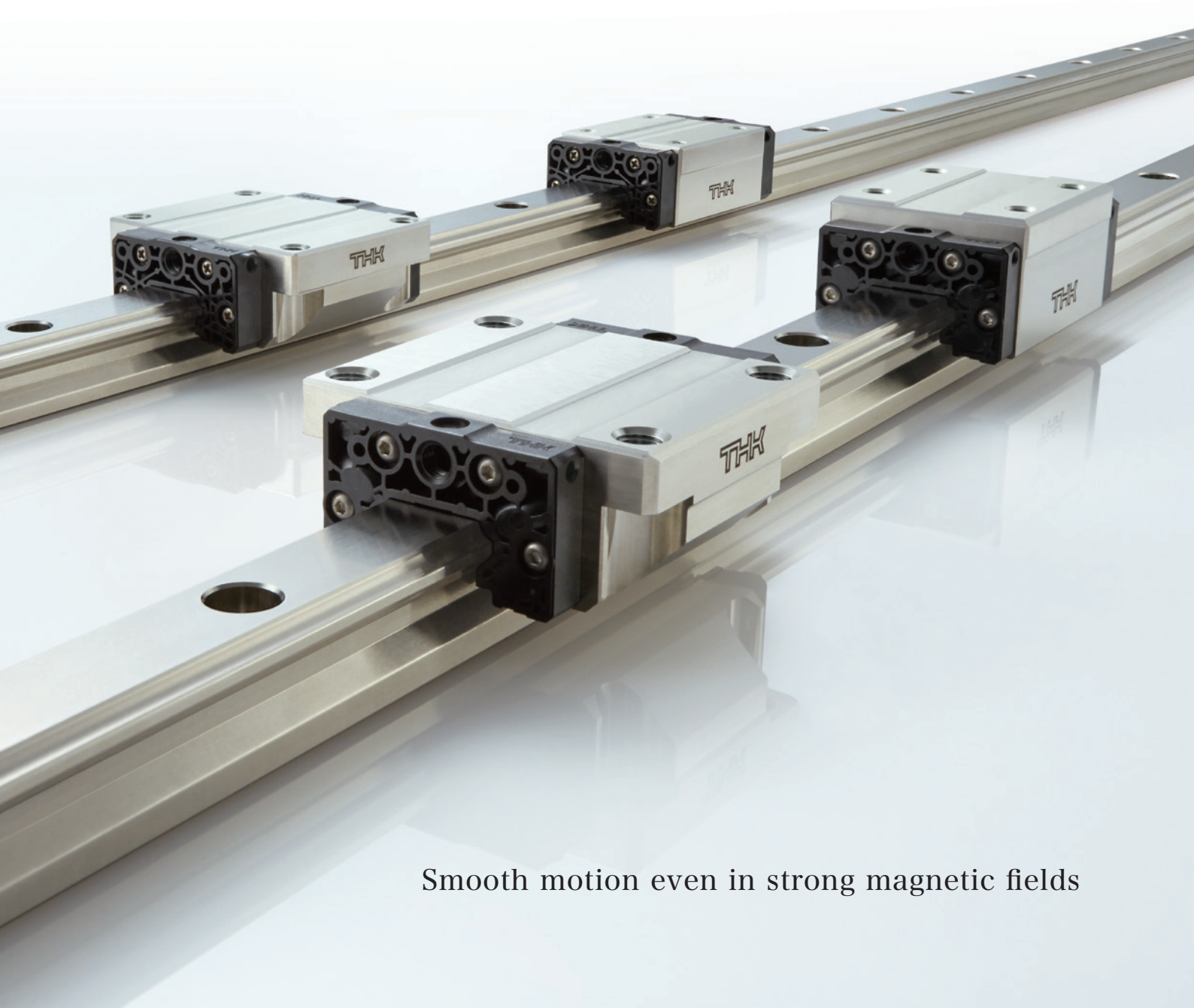

Smooth motion even in strong magnetic fields

A tried-and-true product adapted for use in magnetic fields

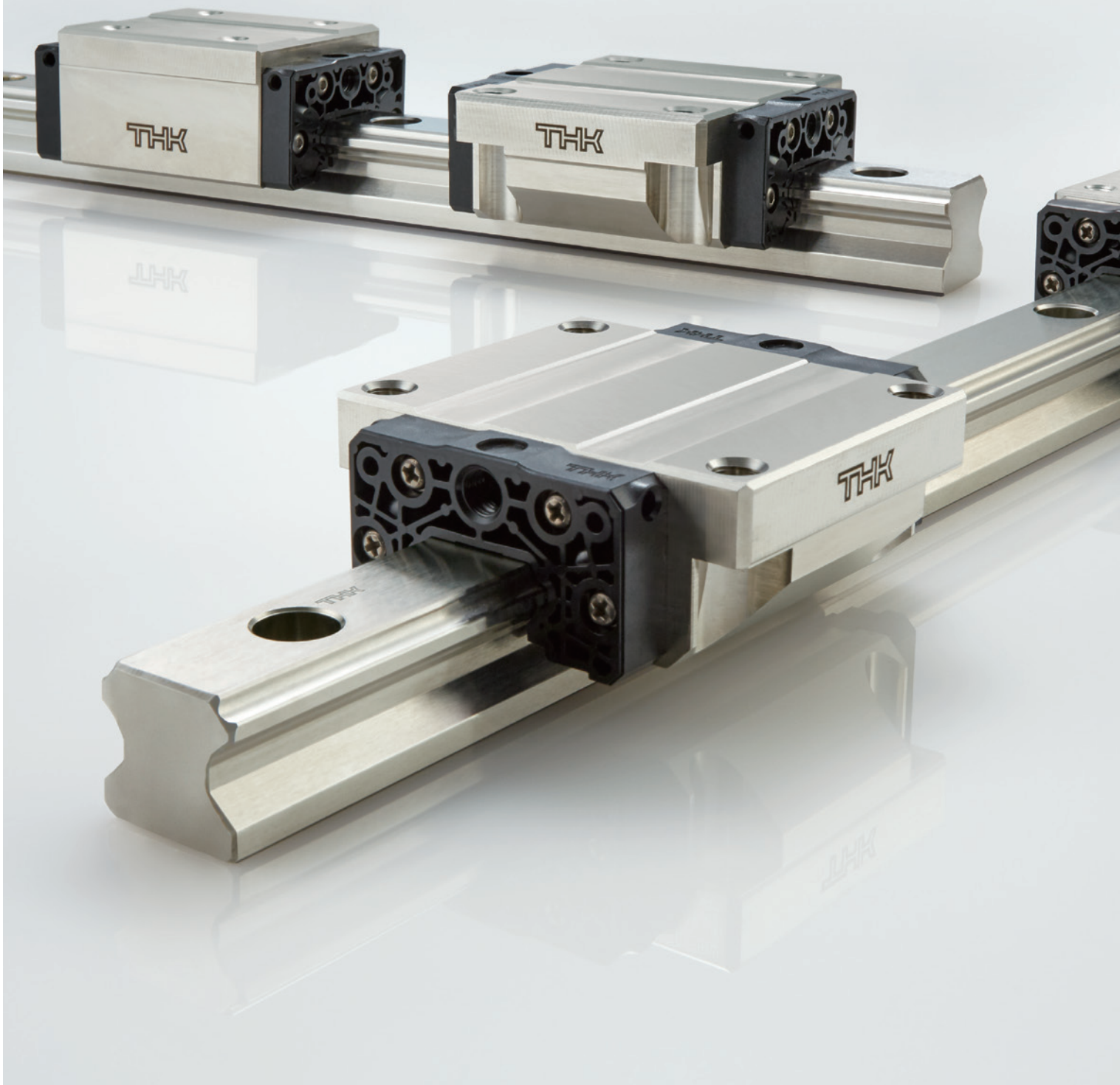



Low-Magnetic Permeability LM Guide

HSR-M3

Feature 1 **Low Magnetic Permeability**
(A Relative Magnetic Permeability of 1.02 or Less)

Feature 2 **Four-Way Equal Load**

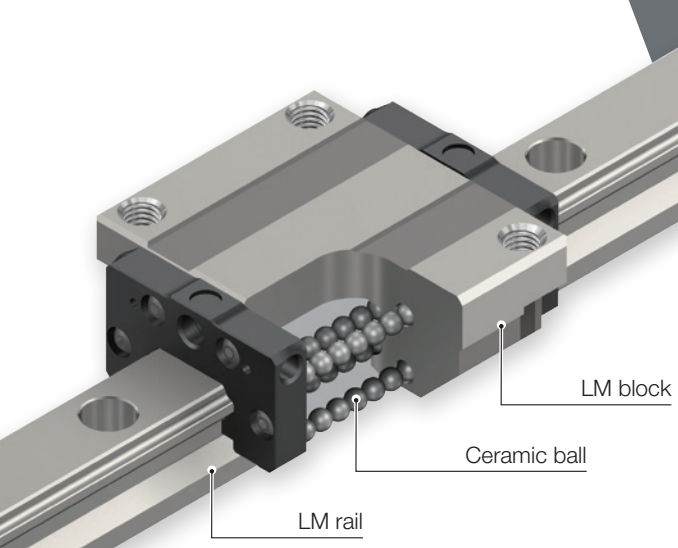

Highly accurate, stable linear

Feature 1

Low Magnetic Permeability
(A Relative Magnetic Permeability of 1.02 or Less)

An LM Guide that resists the effects of magnetic fields has been added to the lineup of the tried-and-true Model HSR. For this product, a relative magnetic permeability of 1.02 is achieved using components made of materials with low magnetic permeability so that maximum performance can be achieved even in a magnetic field.

Additionally, with a hardness of 40 HRC or greater, the material used for the Model HSR-M3 can tolerate higher loads than SUS316, which is itself well-known for its low magnetic permeability.

Did you know?

What is relative magnetic permeability?

Relative magnetic permeability is the ratio of the magnetic permeability of a substance to that of a vacuum according to the following formula.

The lower a substance's relative magnetic permeability, the more it resists the effects of a magnetic field.

$$\text{Relative permeability} = \frac{\text{Magnetic permeability of given substance}}{\text{Magnetic permeability of a vacuum}}$$

Hardness and Relative Permeability of Materials

The HSR-M3 is made of a material that resists the effects of magnetic fields in the same way that SUS316 does while also providing hardness of 40 HRC or greater.

This makes magnetic fields a non-issue during design.

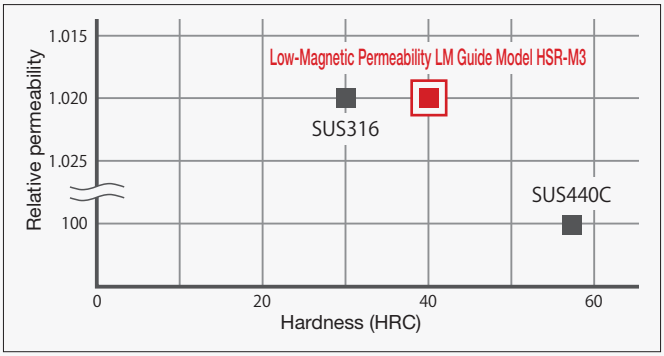

Placement within a Magnetic Field

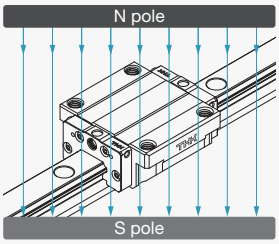

Model HSR-M3:

The material doesn't become magnetized, so it barely affects magnetic flux.

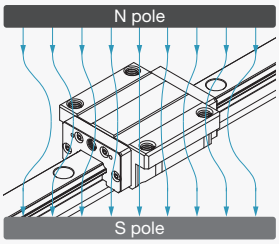

Typical carbon steel product:

The material becomes magnetized, so it affects magnetic flux.

Example Applications

Using HSR-M3 LM Guide units enables smooth motion unaffected by strong magnetic fields.

MRI (magnetic resonance imaging) machines



Testing equipment



motion over the long term even in strong magnetic fields

Feature 2 Four-Way Equal Load

Each row of balls is arranged at a contact angle of 45° so that the rated load on the LM block is uniform under loads applied in four directions (radial, reverse-radial, and lateral directions). Due to this, the HSR can be used in a variety of orientations, which expands the range of applications for which it is suitable.

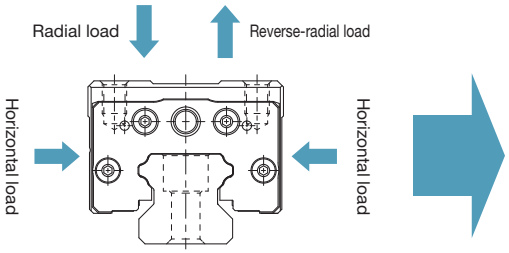

The same load can be supported from all four directions.

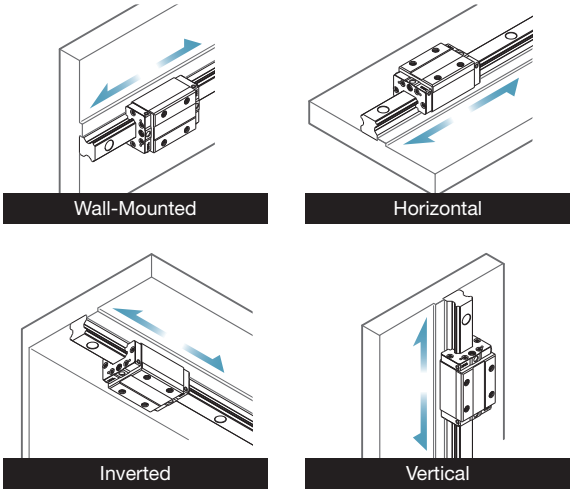

LM GUIDE HSR Series

Providing globally standard, top-class quality

The HSR Series is used in many machines around the world. Its robustness, load capacity, high accuracy, and ease of use provides linear motion that is highly accurate and stable over the long term. Since its arrival on the market, the HSR Series has become a long-time bestseller, earning the world's trust by offering high quality and high performance together.



Quality Highlights

Self-Adjustment Capability

The face-to-face arrangement of THK's unique circular arc groove (DF set) has self-adjusting capabilities that absorb mounting errors.

High Durability

Balls undergo little differential slippage when rolling, even with an unbalanced load applied. This, coupled with high wear resistance, maintains a high degree of accuracy over the long term.

Globally Standard Dimensions

Conforming to ISO standards (ISO 12090-1:2011 Rolling Bearings), the HSR Series has come to define the globally standard dimensions of Full-Ball LM Guide units.

Lineup

Flange Type C/LC Sizes: 15, 20, 25

The flanged area of the LM block has tapped holes to accommodate mounting bolts from above or below, making this a highly practical block type.
Two types of block are offered, the standard C type and the long LC type.

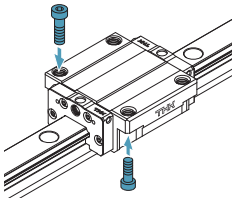

Compact Type R/LR Sizes: 15, 20, 25

With this type, the LM block has a smaller width (W) and tapped holes. It is ideal for compact designs.
Two types of block are offered, the standard R type and the long LR type.

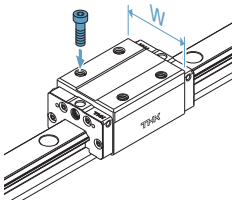

Contamination Protection Accessories

It is necessary to prevent foreign materials from getting inside the product, as it will lead to abnormal wear and a shortened service life. If it is likely that foreign materials will get inside, it is important to select an effective sealing or contamination protection device suited to the environmental conditions.

Note: Please contact THK regarding seals.

■ Dedicated Cap for LM Rail Mounting Holes

Using dedicated caps to cover the LM rail mounting holes helps prevent foreign material from entering the mounting holes and LM block.

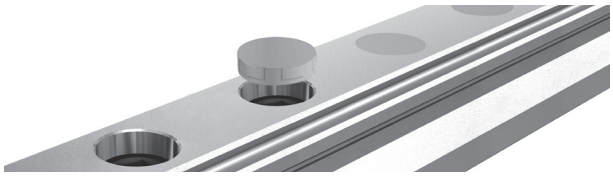

CV Caps and C Caps

These caps are made of a special synthetic resin.

The CV cap is the successor to the C cap, and its new structure makes it easier to insert.

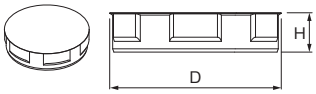

CV cap C cap

Model No.	Cap model	Bolts used	Main dimensions (mm)	
			D	H
HSR15M3	C4	M4	7.9	1
HSR20M3	CV5	M5	9.8	2.6
HSR25M3	CV6	M6	11.4	2.6

Note: Contact THK if this product will be used in special environments such as in a vacuum, or at very low or high temperatures.
CV caps and C caps must be ordered separately from the LM Guide.

Lubrication

Standard Grease

AFB-LF Grease is a general-purpose grease that provides excellent extreme pressure and mechanical stability properties through the use of a refined mineral oil base oil and a lithium-based consistency enhancer.

Note: Non-standard greases are also available. Contact THK for details.

AFB-LF Representative Physical Properties

Item		Representative property	Testing method
Consistency enhancer		Lithium-based	
Base oil		Refined mineral oil	
Base oil kinematic viscosity: mm^2/s (40°C)		170	JIS K 2220 23
Worked penetration (25°C, 60 W)		275	JIS K 2220 7
Mixing stability (100,000 W)		345	JIS K 2220 15
Dropping point: °C		193	JIS K 2220 8
Evaporation volume: mass% (99°C, 22 h)		0.4	JIS K 2220 10
Oil separation rate: mass% (100°C, 24 h)		0.6	JIS K 2220 11
Copper plate corrosion (B method, 100°C, 24 h)		Passed	JIS K 2220 9
Low-temperature torque: mN·m (-20°C)	Starting	130	JIS K 2220 18
	Rotational	51	
4-ball testing (welding load): N		3,089	ASTM D2596
Operating temperature range: °C		-15 to 100	
Color		Yellowish brown	

Radial Clearance Specifications

The HSR-M3 has one type of radial clearance: normal.

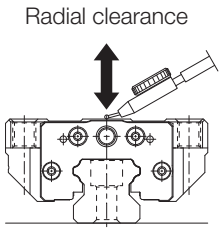

Radial Clearance Specifications Unit: μm

Model No.	Normal
	No symbol
HSR15M3	-4 to +2
HSR20M3	-5 to +2
HSR25M3	-6 to +3

Accuracy Standards

The accuracy of the LM Guide is specified for each model in terms of the dimensional tolerance for height and width, the difference between height and width in a pair, and running parallelism. The HSR-M3 has one type of accuracy standard: Normal grade.

■ Difference in Height M

The difference in height M indicates the difference between the minimum and maximum values of the height (M) of each of the LM blocks used together on the same plane.

■ Difference in Width W_2

The difference in width W_2 indicates the difference between the minimum and maximum values of the width (W_2) between an LM rail and each of the LM blocks mounted together on the LM rail.

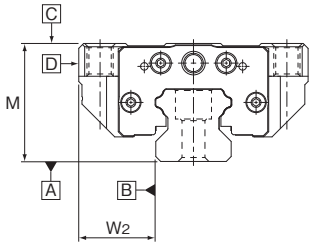

■ Running Parallelism

Running parallelism refers to the tolerance for parallelism between the LM block and the LM rail reference surface when the LM block travels the whole length of the LM rail with the LM rail bolted to the reference surface of a base.

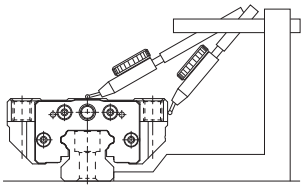

Accuracy Standards Unit: mm

Model No.	Item	Normal grade
		No symbol
HSR15M3 HSR20M3	Dimensional tolerance in height M	±0.07
	Difference in height M	0.02
	Dimensional tolerance in width W_2	±0.06
	Difference in width W_2	0.02
	Running parallelism of surface C against surface A	See the table below for LM rail length and running parallelism by accuracy standard
	Running parallelism of surface D against surface B	See the table below for LM rail length and running parallelism by accuracy standard
HSR25M3	Dimensional tolerance in height M	±0.08
	Difference in height M	0.02
	Dimensional tolerance in width W_2	±0.07
	Difference in width W_2	0.025
	Running parallelism of surface C against surface A	See the table below for LM rail length and running parallelism by accuracy standard
	Running parallelism of surface D against surface B	See the table below for LM rail length and running parallelism by accuracy standard

LM Rail Length and Running Parallelism by Accuracy Standard Unit: μm

LM rail length (mm)		Running parallelism value
Above	Up to	Normal grade
–	50	5
50	80	5
80	125	5
125	200	5
200	250	6
250	315	7
315	400	8
400	500	9
500	630	11
630	800	12
800	1,000	13

Static Safety Factor

To calculate a load applied to the LM Guide, you must first obtain the average load required to determine the service life and the maximum load needed to determine the static safety factor. In particular, if the system starts and stops frequently, if a cutting load acts on the system, or if a large moment caused by an overhanging load is applied, it may experience an unexpectedly large load. When selecting a model number, make sure that the desired model is capable of supporting the required maximum load (whether stationary or in motion).

Estimates for the static safety factor are shown in the table to the right.

Estimates of the Static Safety Factor (f_S)

Load conditions*	Lower limit of f_S
Without vibrations or impacts	2
With vibrations or impacts	5

* Vibrations and impacts are typically caused by factors such as acceleration and deceleration, sudden starting and stopping, vibrations and impacts from an external machine, and changes in processing power over time.

$$f_s = \frac{C_0}{P_{max}}$$

f_S: Static safety factor
C_0: Basic static load rating (N)
P_{max}: Maximum applied load (N)

Nominal Life and Service Life Time

Calculating the Nominal Life

The nominal life (L_{10}) is obtained from the following formulas using the basic dynamic load rating (C) and the calculated load acting on the LM Guide (P_C).
Calculate the nominal life of an LM Guide with balls using a basic dynamic load rating based on a nominal life of 50 km.

LM Guide with balls
(Using a basic dynamic load rating such that the nominal life will be 50 km)

$$L_{10} = \left(\frac{C}{P_C}\right)^3 \times 50$$

L_{10}: Nominal life (km)
C: Basic dynamic load rating (N)
P_C: Calculated load (N)

Note: These nominal life formulas may not apply if the length of the stroke is less than or equal to twice the length of the LM block.

When comparing the nominal life (L_{10}), you must take into account whether the basic dynamic load rating was defined based on 50 km or 100 km. Convert the basic dynamic load rating based on ISO 14728-1 as necessary.

ISO-regulated basic dynamic load rating conversion formula:

• LM Guide with balls (Formula 1)

$$C_{100} = \frac{C_{50}}{1.26}$$

C_{50}: Basic dynamic load based on a nominal life of 50 km
C_{100}: Basic dynamic load based on a nominal life of 100 km

Calculating the Modified Nominal Life

During use, an LM Guide may be subjected to vibrations and shocks as well as fluctuating loads, which are difficult to detect. In addition, the surface hardness of the raceways, the operating temperature, and having LM blocks arranged directly behind one another will have a decisive impact on the service life. Taking these factors into account, the modified nominal life (L_{10m}) can be calculated according to the following two formulas.

Modified factor α

$$\alpha = \frac{f_H \cdot f_T \cdot f_C}{f_W}$$

α: Modified factor
f_H: Hardness factor
f_T: Temperature factor
f_C: Contact factor
f_W: Load factor

Note: See the linear motion systems general catalog for details of the hardness factor, temperature factor, contact factor, and load factor.

Modified nominal life L_{10m}:

• LM Guide with balls (Formula 2)

$$L_{10m} = \left(\alpha \times \frac{C}{P_C}\right)^3 \times 50$$

L_{10m}: Modified nominal life (km)
C: Basic dynamic load rating (N)
P_C: Calculated load (N)

Once the nominal life (L_{10}) has been obtained, the service life time can be obtained using the following formula if the stroke length and the number of cycles are constant.

$$L_h = \frac{L_{10} \times 10^6}{2 \times \ell_s \times n_1 \times 60}$$

L_h: Service life time (h)
ℓ_s: Stroke length (mm)
n_1: Cycles per minute (min^{-1})

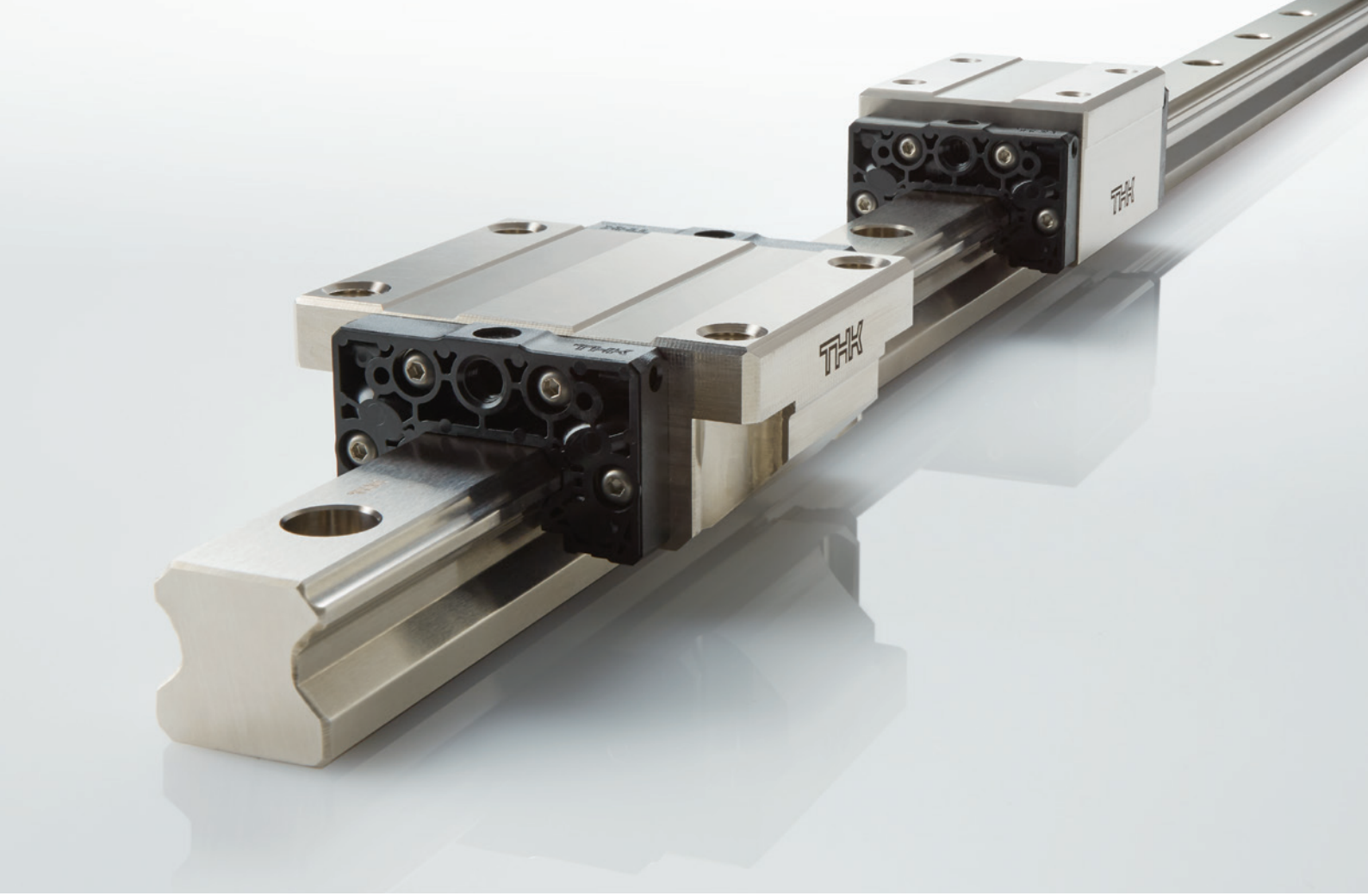

Standard and Maximum Lengths of the LM Rail

The standard and maximum lengths of Model HSR-M3 LM rails are shown in the following table. For special rail lengths, it is recommended to use a value corresponding to the G and g dimensions from the table. As the G and g dimensions increase, that portion becomes less stable, and the accuracy may be negatively affected.

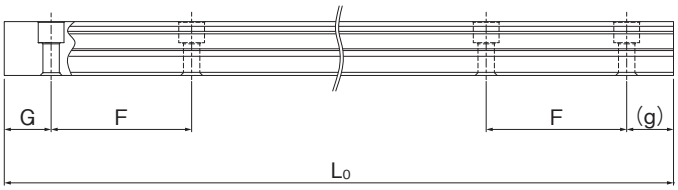

Standard and Maximum Lengths of the LM Rail

Unit: mm

Model No.	HSR15M3	HSR20M3	HSR25M3
LM rail Standard length (L_0)	160	280	280
	280	460	460
	460	640	640
	640	820	820
	–	–	1,000
Standard pitch F	60	60	60
G, g dimension	20	20	20
Max length	1,000	1,000	1,000

Dimensional Table

Model HSR-M3 (C/LC)

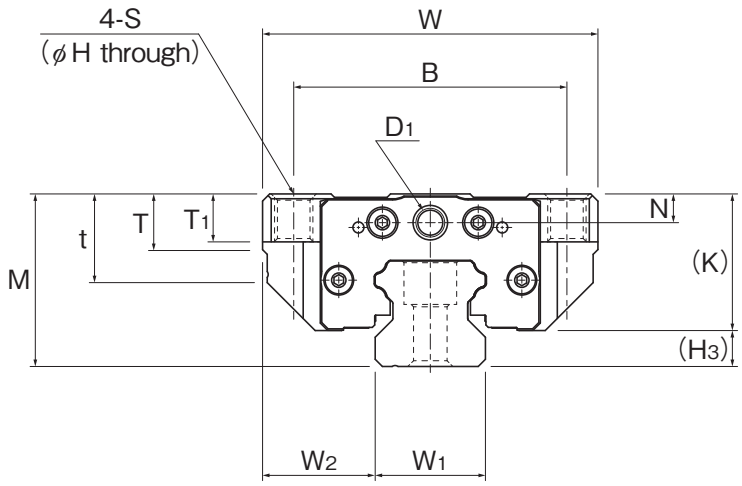

Model No.		Outer dimensions			LM block dimensions											Pilot hole for lubrication hole			H3	
		Height	Width	Length			Mounting hole													
		M	W	L	B	C	S	H	L_1	t	T	T_1	K	N	D_1	e_0	f_0	D_0		
HSR15M3	C	24	47	51.6	38	30	M5	4.4	38.8	11	6.4	7	19.2	4.3	ϕ4	3.2	3.9	3	4.8	
	LC			69.6					56.8											
HSR20M3	C	30	63	68	53	40	M6	5.4	50.8	14.4	9.5	10	24.4	5	M6×0.75	3.1	3.4	3	5.6	
	LC			84					66.8											
HSR25M3	C	36	70	76.1	57	45	M8	6.8	59.5	18.5	11.6	10	28.5	6	M6×0.75	3.5	4	3	7.5	
	LC			95.2					78.6											

Model Number Coding

Select an option * Specify each item for the models in the catalog.

HSR15M3 LC 2 +640L T -II

- HSR15M3: Model No.
- LC: LM block type C/LC
- 2: Number of LM blocks used on a single rail
- +640L: LM rail length (in mm)
- T: Joint LM rail symbol
- -II: Symbol for number of rails used on the same plane

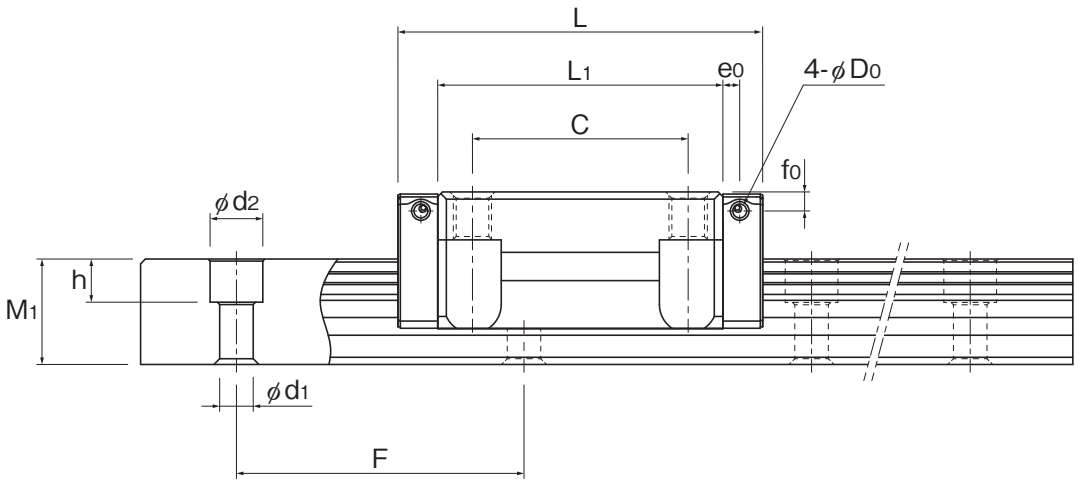

Unit: mm

	LM rail dimensions						Basic load rating		Static permissible moment* kN·m					Mass	
	Width W_1 ±0.05	W_2	Height M_1	Pitch F	Mounting hole $d_1 \times d_2 \times h$	Length Max	C (kN)	C_0 (kN)	M_A 1 block	M_A 2 blocks	M_B 1 block	M_B 2 blocks	M_C 1 block	LM block (kg)	LM rail (kg/m)
	15	16	15	60	4.5×7.5×5.3	1,000	2.3	1.9	0.0117	0.0655	0.0117	0.0655	0.0101	0.23	1.5
							3	2.7	0.0235	0.1193	0.0235	0.1193	0.0143	0.32	
	20	21.5	18	60	6×9.5×8.5		4.2	3.3	0.0269	0.1484	0.0269	0.1484	0.0242	0.43	2.3
							5	4.3	0.0447	0.2305	0.0447	0.2305	0.0316	0.56	
	23	23.5	22	60	7×11×9		5.8	4.4	0.0402	0.2247	0.0402	0.2247	0.0378	0.67	3.3
							7.4	6.2	0.0732	0.3796	0.0732	0.3796	0.0535	0.84	

* Static permissible moment 1 block: Static permissible moment value with 1 LM block
2 blocks: Static permissible moment during use with 2 LM blocks in close contact with each other

Note: The balls will fall out of the block if it is removed from the rail.

Dimensional Table

Model HSR-M3 (R/LR)

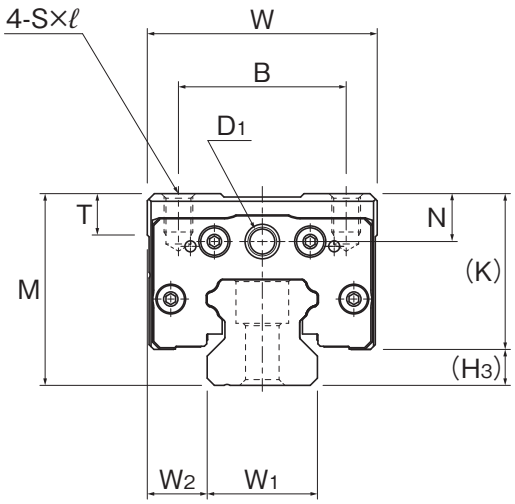

Model No.		Outer dimensions			LM block dimensions								Pilot hole for lubrication hole			H3	
		Height	Width	Length			Mounting hole										
		M	W	L	B	C	Sxℓ	L1	T	K	N	D1	e0	f0	D0		
HSR15M3	R	28	34	51.6	26	26	M4×5	38.8	6	23.2	8.3	ø4	3.2	7.9	3	4.8	
	LR			69.6		34		56.8									
HSR20M3	R	30	44	68	32	36	M5×6	50.8	8	24.4	5	M6×0.75	3.1	3.4	3	5.6	
	LR			84		50		66.8									
HSR25M3	R	40	48	76.1	35	35	M6×8	59.5	9	32.5	10	M6×0.75	3.5	8	3	7.5	
	LR			95.2		50		78.6									

Model Number Coding

Select an option * Specify each item for the models in the catalog.

HSR15M3 LR 2 +640L T -II

- HSR15M3: Model No.
- LR: LM block type R/LR
- 2: Number of LM blocks used on a single rail
- +640L: LM rail length (in mm)
- T: Joint LM rail symbol
- -II: Symbol for number of rails used on the same plane

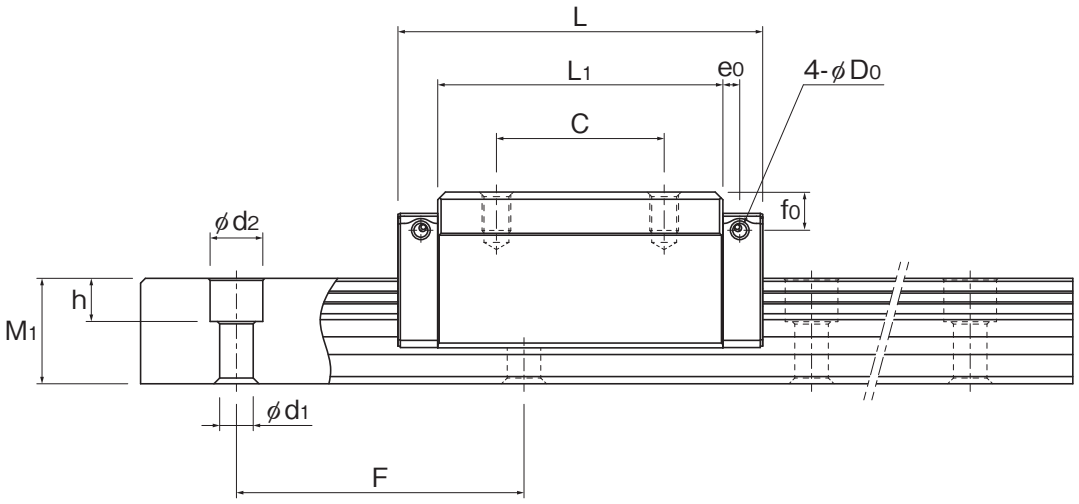

Unit: mm

	LM rail dimensions						Basic load rating		Static permissible moment* kN·m					Mass	
	Width W_1 ±0.05	W_2	Height M_1	Pitch F	Mounting hole $d_1 \times d_2 \times h$	Length Max	C (kN)	C_0 (kN)	M_A 1 block	M_A 2 blocks	M_B 1 block	M_B 2 blocks	M_C 1 block	LM block (kg)	LM rail (kg/m)
	15	9.5	15	60	4.5×7.5×5.3	1,000	2.3	1.9	0.0117	0.0655	0.0117	0.0655	0.0101	0.19	1.5
							3	2.7	0.0235	0.1193	0.0235	0.1193	0.0143	0.26	
	20	12	18	60	6×9.5×8.5		4.2	3.3	0.0269	0.1484	0.0269	0.1484	0.0242	0.28	2.3
							5	4.3	0.0447	0.2305	0.0447	0.2305	0.0316	0.37	
	23	12.5	22	60	7×11×9		5.8	4.4	0.0402	0.2247	0.0402	0.2247	0.0378	0.56	3.3
							7.4	6.2	0.0732	0.3796	0.0732	0.3796	0.0535	0.68	

* Static permissible moment 1 block: Static permissible moment value with 1 LM block
2 blocks: Static permissible moment during use with 2 LM blocks in close contact with each other

Note: The balls will fall out of the block if it is removed from the rail.

Shoulder Height of the Mounting Base and the Corner Radius

The LM rail and LM block ordinarily have a reference surface on the side face to allow easy installation and highly accurate positioning. The corner of the mounting shoulder must be machined to have a recess, or machined to be smaller than the corner radius r, to prevent interference with the chamfer of the LM rail or the LM block.

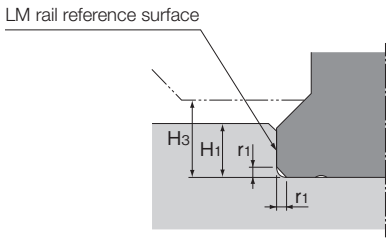

LM rail

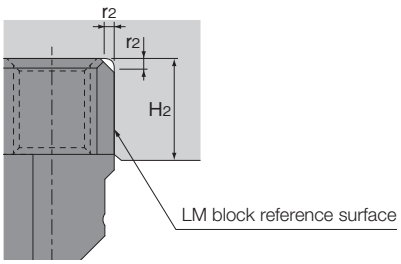

LM block

Shoulder Height of the Mounting Base and the Corner Radius Unit: mm

Model No.	LM rail corner radius r_1 (max)	LM block corner radius r_2 (max)	LM rail shoulder height H_1	LM block shoulder height H_2	H_3
HSR15M3	0.5	0.5	3	4	4.8
HSR20M3	0.5	0.5	3.5	5	5.6
HSR25M3	1	1	5	5	7.5

Handling

(1) Please use at least two people to move any product with a mass of 20 kg or more, or use a cart or another method of conveyance. Otherwise, it may cause injury or damage the unit.
(2) Do not disassemble the parts. This may result in loss of functionality.
(3) Tilting an LM block or LM rail may cause them to fall by their own weight.
(4) Take care not to drop or strike the LM Guide. Otherwise, it may cause injury or damage the unit. Even if there is no outward indication of damage, a sudden impact could prevent the unit from functioning properly.
(5) When installing the LM Guide, be sure not to remove the LM block from the LM rail.
(6) Placing a hand inside the LM rail mounting hole may lead to the hand being caught between the block and rail and cause injury.
(7) Wear appropriate safety gear, such as protective gloves and safety shoes, when handling the product.

Use

(1) Prevent foreign materials, such as cutting chips or coolant, from entering the product. Failure to do so could damage the product.
(2) If the product is used in an environment where cutting chips, coolant, corrosive solvents, or water may enter the product, use bellows or covers to prevent them from entering the product.
(3) Do not use the product at temperatures of 80°C or higher. Unless the unit is specially designed to be heat-resistant, exposure to such temperatures may deform or damage resin and rubber parts.
(4) If foreign materials such as cutting chips adhere to the product, replenish the lubricant after cleaning the product.
(5) Very small strokes can inhibit the formation of an oil film between the raceways and the area of contact for the balls, resulting in fretting. Therefore, be sure to use a type of grease with high fretting resistance properties if the stroke will be small. We recommend periodically allowing the LM block to stroke a distance roughly equal to its length to help ensure that a film forms between the raceways and balls.
(6) Do not forcibly drive a pin, key, or other positioning device into the product. This could create indentations on the raceway and impair the product's function.
(7) If, for operational reasons, it becomes absolutely necessary to remove the LM block from the LM rail and reattach it, a special removing/mounting jig is needed. Please contact THK if you require this jig.
(8) When using a removing/mounting jig, align the ends of the LM rail and the jig and mount the block when the jig and rail are parallel.
(9) Mounting the block while it is tilted can lead to contamination by foreign materials, damage to internal components, or dropped balls.
(10) Inserting and using the LM block on the LM rail while balls are missing could lead to premature failure of the product.
(11) If any balls fall out of the LM block, contact THK. Do not use the product in that condition.
(12) If the LM Guide breaks due to an accident or another cause, the LM block may become dislodged from the LM rail and fall. For the safe use of these products, take precautions such as adding a mechanism to prevent blocks from falling.
(13) For the bolt length, select a length that will leave a clearance at the bolt tip in relation to the effective tap depth.
(14) If the mounting material lacks sufficient rigidity or accuracy, the bearing load will be concentrated at one location and performance will dramatically decrease. Therefore, carefully consider the rigidity and accuracy of the housing and base as well as the strength of the securing bolts.

Lubrication

(1) Thoroughly remove anti-rust oil and apply lubricant before using the product.
(2) Do not mix different lubricants. Even greases containing the same type of consistency enhancer may, if mixed, interact negatively due to disparate additives or other ingredients.
(3) When using the product in locations exposed to constant vibrations or in special environments such as clean rooms, vacuums, and extreme heat or cold, use a lubricant suitable for its use/environment.
(4) When lubricating a product having no grease nipple or lubrication hole, apply grease directly on the raceway and stroke the product several times to let the grease spread inside.
(5) The consistency of grease changes according to the temperature. Take note that the slide resistance of the LM Guide may be affected by changes in viscosity.
(6) After lubrication, the slide resistance of the LM Guide may increase due to the stirring resistance of the grease. Be sure to perform a warm-up operation and allow the grease to break in sufficiently before operating the machine.
(7) Excess grease may spatter after lubrication. Wipe off spattered grease as necessary.
(8) Grease deteriorates over time, which decreases its lubricity, so perform regular grease inspections and replenish grease based on frequency of use.
(9) How often grease should be replenished varies depending on the operating conditions and environment. We recommend greasing the system approximately every 100 km traveled (3 to 6 months). The final lubrication interval/amount should be set at the actual machine.
(10) The lubricant may not reach the raceway if the LM Guide is not installed in a horizontal orientation.
(11) When adopting oil lubrication, the lubricant may not be distributed throughout the LM Guide depending on the mounting orientation of the LM block. Contact THK for details.

Storage

When storing the LM Guide, pack it as designated by THK and store it indoors in a horizontal position away from high or low temperatures and high humidity.
Please note that if the product has been kept in storage for an extended period, the lubricant inside may have deteriorated. Please ensure that you replenish the lubricant before use.
If you request that we do not apply anti-rust oil to a product, please be aware that it may rust due to the storage environment or length of storage.

Disposal

Dispose of the product properly as industrial waste.

Low-Magnetic Permeability LM Guide **HSR-M3**

● **"LM Guide" and " " are registered trademarks of THK CO., LTD.**

● The actual products may differ from the pictures and photographs in this catalog.
● Outward appearances and specifications are subject to change without notice for the purpose of improvement. Please consult with THK before using.
● Although great care has been taken in the production of this catalog, THK will not take any responsibility for damage resulting from typographical errors or omissions.
● For exports of our products and technologies and sales for export, our basic policy is to comply with the Foreign Exchange and Foreign Trade Act and other laws and regulations. Please consult us in advance if you want to export our products by the piece.

All rights reserved

THK CO., LTD.

Global Headquarters 2-12-10 Shibaura, Minato-ku, Tokyo 108-8506 Japan
International Sales Department Phone: +81-3-5730-3860
www.thk.com

CATALOG No.443-1E ©THK CO., LTD. 202512