Ball Spline with Integrated Ball Screw **DSP**



Combined linear motion guide and drive element
that transmits high thrust with smooth movement

Ball Spline with Integrated Ball Screw

# DSP

High thrust is transmitted with smooth motion by combining a ball spline, which serves as a linear motion guide, with a ball screw, which serves as the driving force.

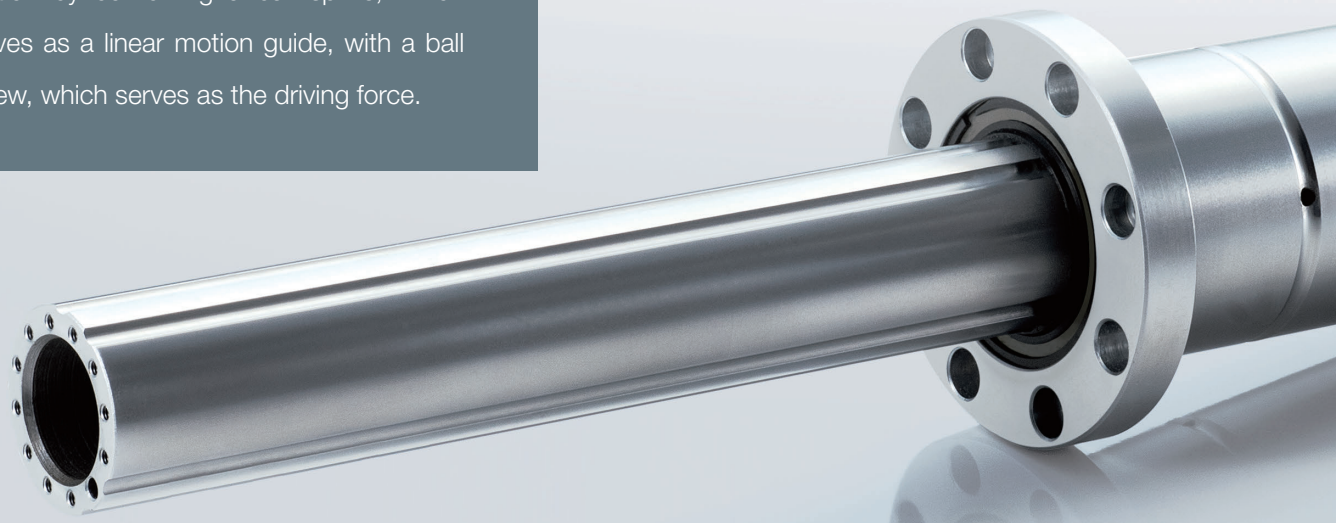

Ball spline

## Linear motion guide × Drive element

Ball screw

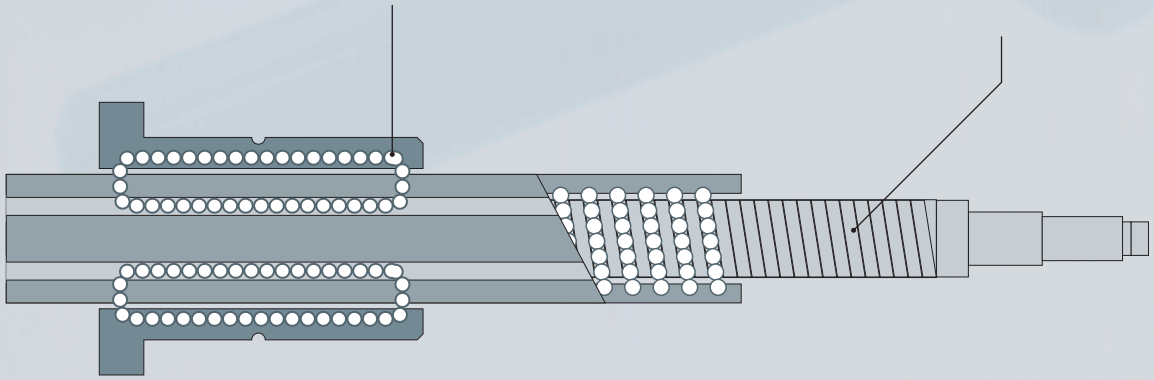

### Ball spline

The ball spline provides smooth motion as balls roll along raceways precisely ground into the spline shaft.

### Ball screw

The ball screw provides high drive efficiency for linear and rotary motion, moving via balls that circulate between the screw shaft and nut.

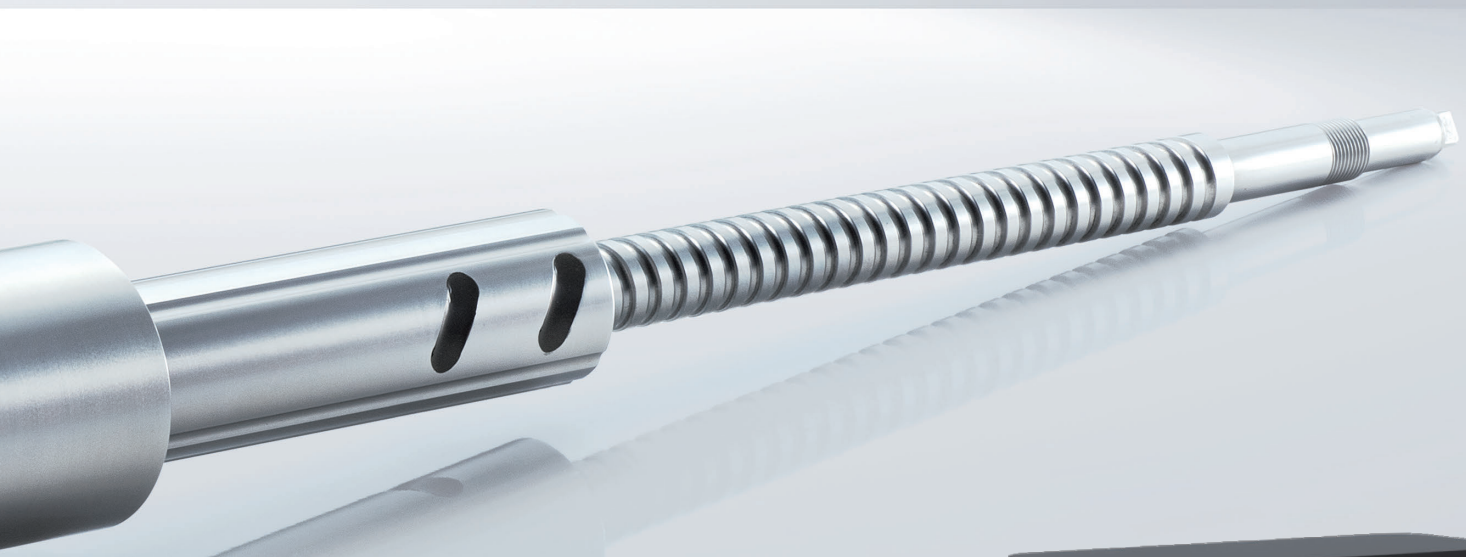

# High thrust

Combined with a reduction gear, the DSP is suited for press applications that require high thrust, such as press fitting and caulking.

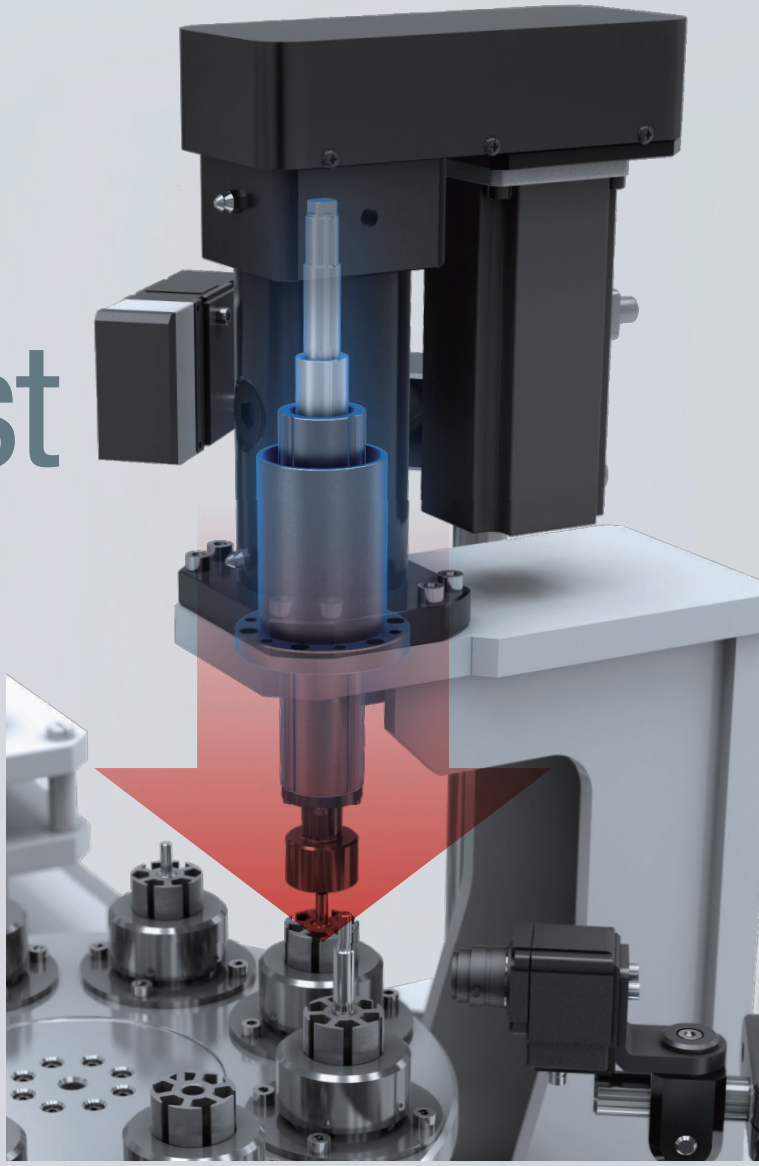

## Machine requires less space due to compact structure

The overall length of the DSP is compact compared to conventional products due to its unique structure, which combines the linear motion guide and drive element. As a result, incorporating the DSP in equipment allows for space savings in height and width.

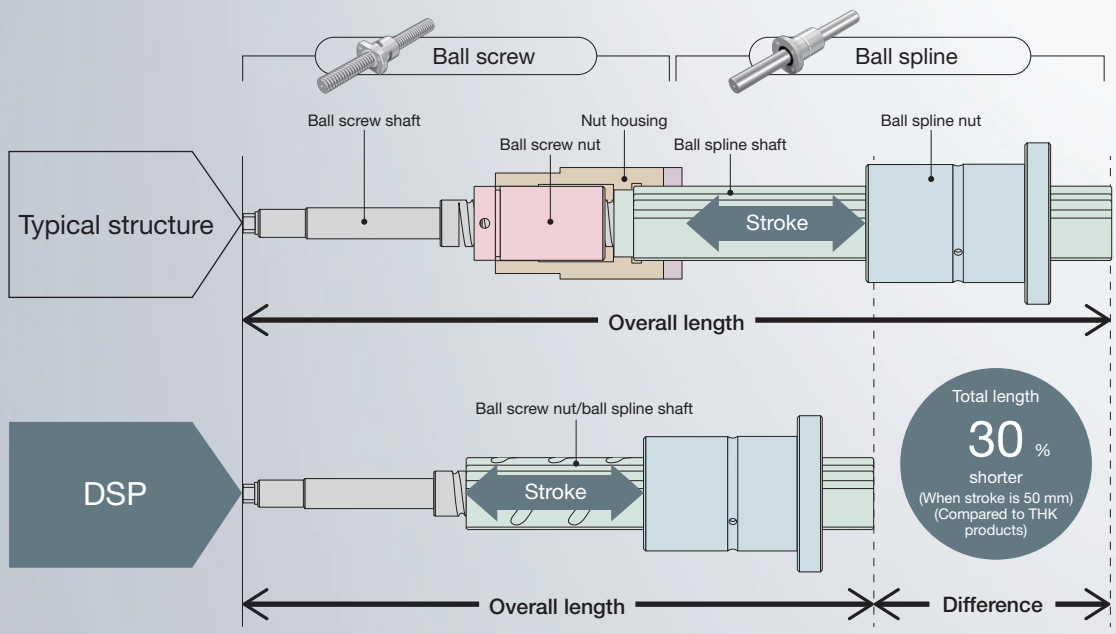


## Reduces equipment design and fabrication time

The DSP has fewer components than conventional products, helping to reduce equipment design and fabrication time through a reduction in assembly time and manufactured parts.

Press forming machine

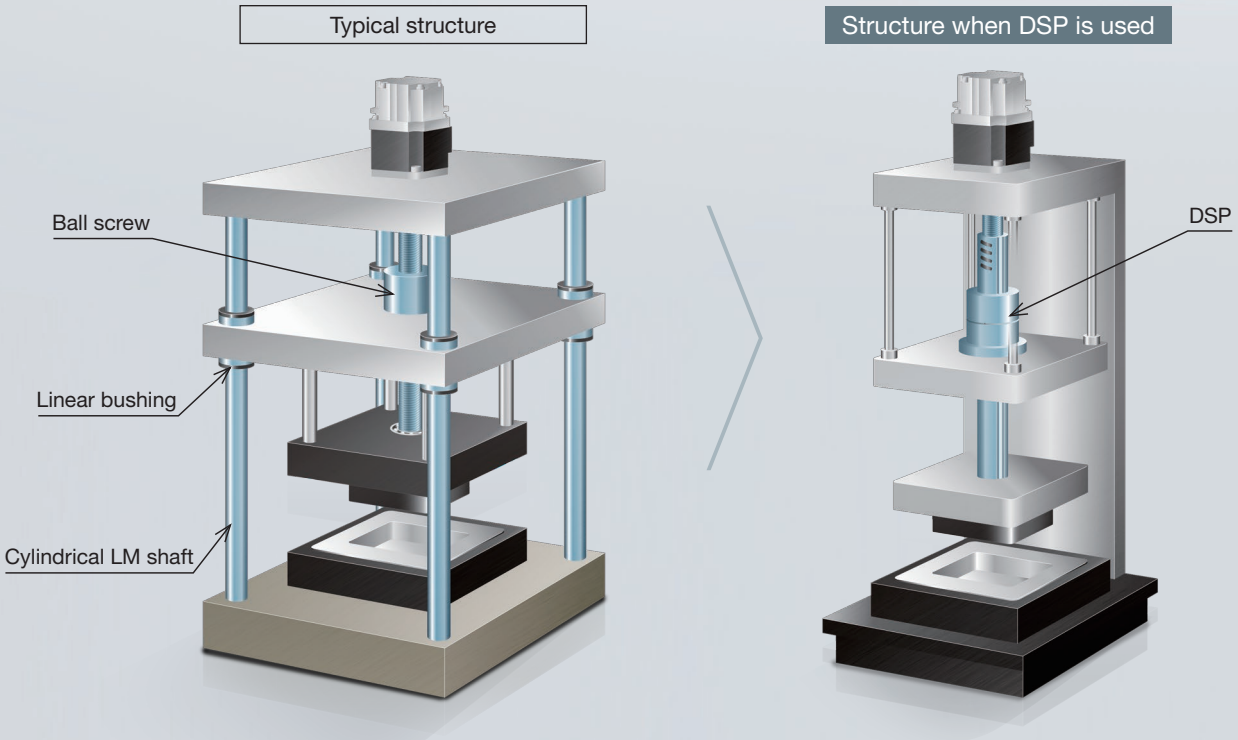

# Application examples

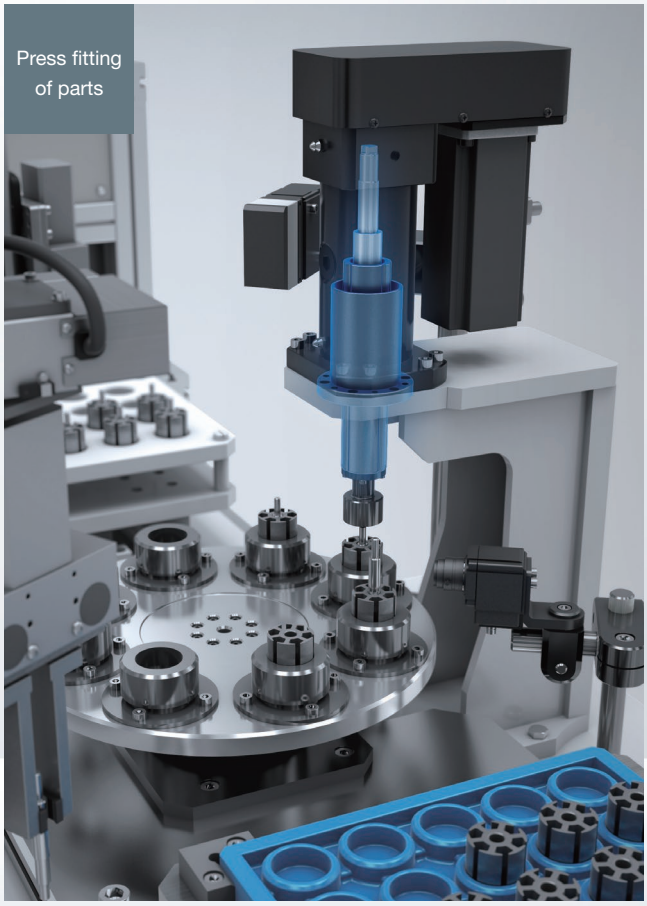


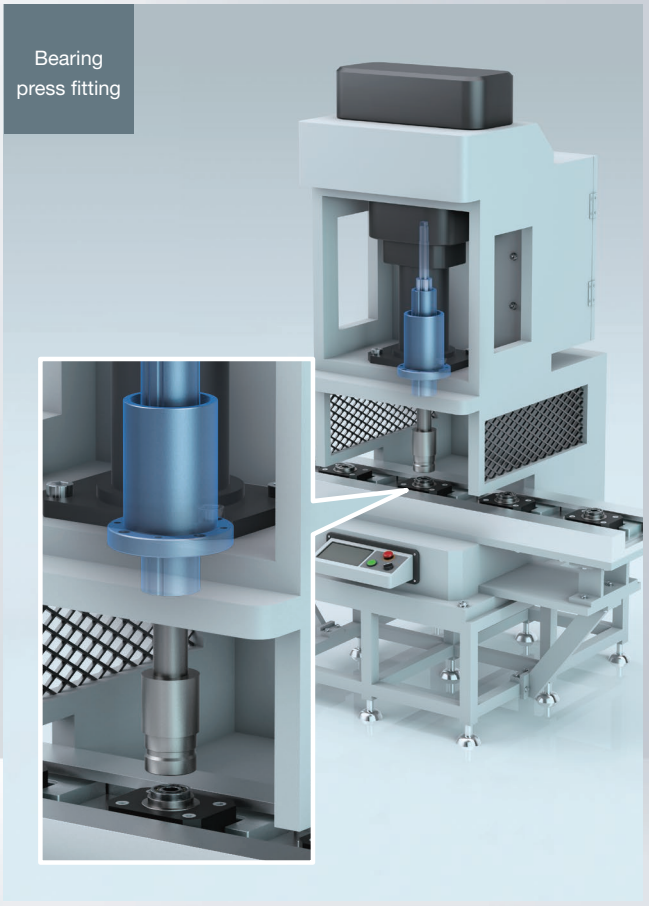


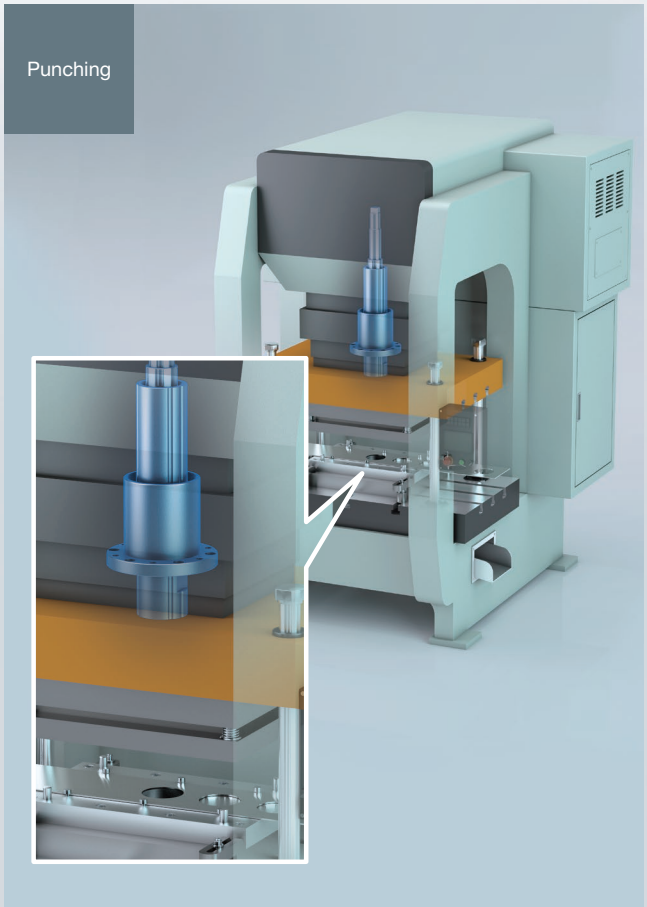


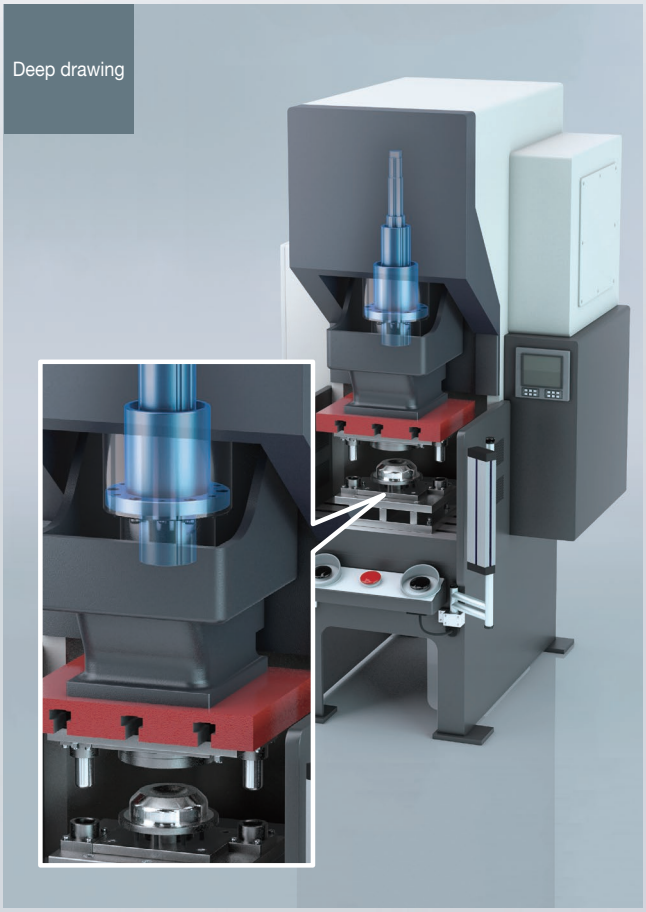

## Movement Mechanism

The ball spline nut unit is fixed, and the ball spline rod is moved by rotating the ball screw shaft in the direction of the arrows.

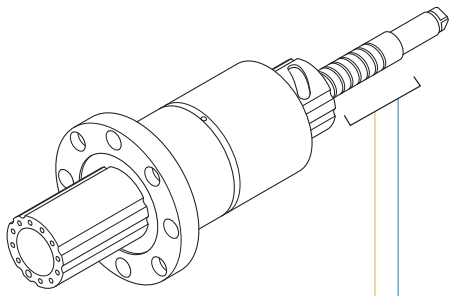

1 When the screw shaft is rotated in the direction of the arrow...

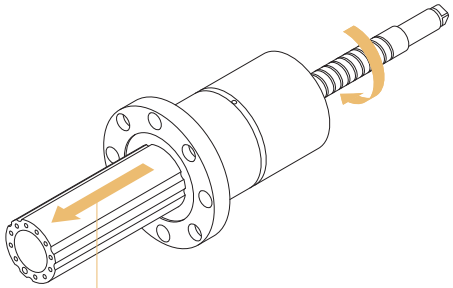

2 The rod is pushed out.

1 When the screw shaft is rotated in the direction of the arrow...

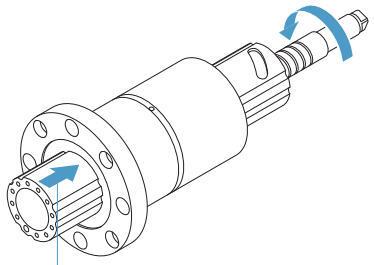

2 The rod is pulled in.

## Assembly Example

The spline nut is mounted on the nut bracket.

After mounting the bearing on the fixed side, the lock nut is tightened and secured on the ball screw shaft side.

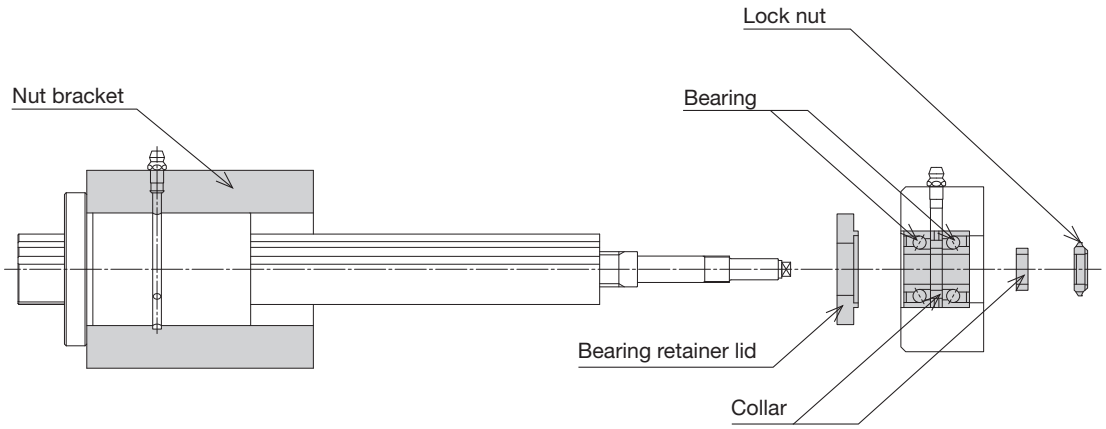

# Model Number Coding

| Model ① | Ball spline shaft diameter ② | Ball screw shaft diameter ③ | Ball screw lead ④ | | Stroke ⑤ | | Shaft end shape: Ball screw shaft side ⑥ | Shaft end shape: Ball spline shaft side ⑦ | | Options ⑧ | | Customization 1 (Surface treatment) ⑨ | Customization 2 ⑩ | Customization 3 ⑪ | Customization 4 ⑫ |
|---|---|---|---|---|---|---|---|---|---|---|---|---|---|---|---|
| DSP | 30 | 16 | 06 | — | 050 | — | M | N | — | N | — | N | X | N | N |
| DSP | 30: 30 mm | 16: 16 mm | 06: 6 mm | | 050: 50 mm | | M: Straight shaft (standard) | N: Standard (DSP 30 to 60: End face tap) (DSP80: Inner diameter threading) | | N: None | | N: No surface treatment | X | N: None | N: None |
| | 40: 40 mm | 20: 20 mm | 08: 8 mm | | 100: 100 mm | | | A: Outer diameter threading | | | | S: With surface treatment (THK AP-C treatment) | | | |
| | 50: 50 mm | 25: 25 mm | 10: 10 mm | | 150: 150 mm | | | B: Inner diameter threading | | | | | | | |
| | 60: 60 mm | 32: 32 mm | 10H: 10 mm | | 200: 200 mm | | | C: End face tap | | | | | | | |
| | 80: 80 mm | 36: 36 mm | 12: 12 mm | | 250: 250 mm | | | | | | | | | | |
| | | 50: 50 mm | | | | | | | | | | | | | |

Combination Options

| ① | ② | ③ | ④ |
|---|---|---|---|
| DSP | 30 | 16 | 06 |
| | 40 | 20 | 06 |
| | | 25 | 08 |
| | 50 | 32 | 06 |
| | 60 | 36 | 10 |
| | | | 10H |
| | 80 | 50 | 12 |

| ①② | Shaft end shape ⑥⑦ | Ball screw shaft side | Ball spline shaft side |
|---|---|---|---|
| DSP30 to DSP60 | MN | Straight shaft | End face tap |
| | MA | Straight shaft | Outer diameter threading |
| | MB | Straight shaft | Inner diameter threading |
| DSP80 | MN | Straight shaft | Inner diameter threading |
| | MA | Straight shaft | Outer diameter threading |
| | MC | Straight shaft | End face tap |

Note: Standard shaft end shape varies by model. See figures below for details.

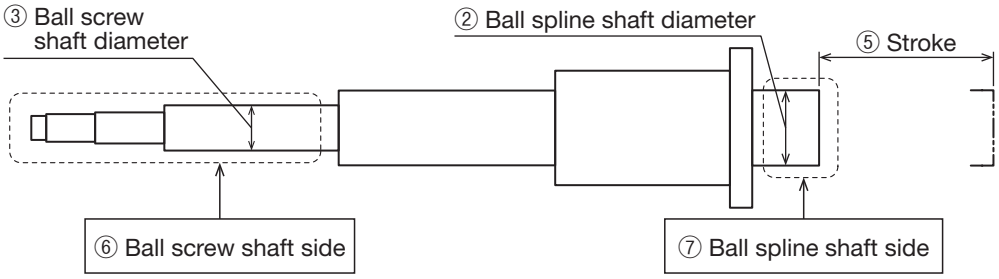


## Shaft End Shape

| ①② | ⑥ Ball screw shaft side | ⑦ Ball spline shaft side | | |
|---|---|---|---|---|
| | Symbol: M | Symbol: N | Symbol: A | Symbol: B |
| DSP30 to 60 | Straight shaft 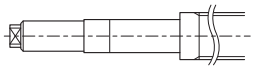 | End face tap (standard) 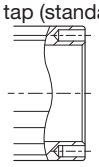 | Outer diameter threading 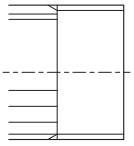 | Inner diameter threading 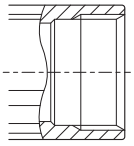 |
| | Symbol: M | Symbol: N | Symbol: A | Symbol: C |
| DSP80 | Straight shaft 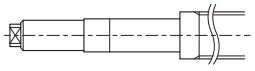 | Inner diameter threading (standard) 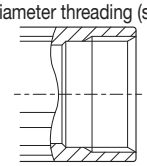 | Outer diameter threading 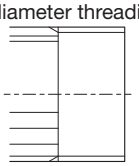 | End face tap 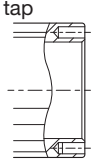 |

## Customization 1

### Surface Treatment (THK AP-C Treatment)

Surface treatment (AP-C treatment) can be selected to increase corrosion resistance.



# DSP30 1606

## Model Number Coding

| Model | Ball spline shaft diameter | Ball screw shaft diameter | Ball screw lead | | Stroke | | Shaft end shape: Ball screw shaft side | Shaft end shape: Ball spline shaft side | | Options | | Customization 1 (Surface treatment) | Customization 2 | Customization 3 | Customization 4 |
|---|---|---|---|---|---|---|---|---|---|---|---|---|---|---|---|
| ① | ② | ③ | ④ | | ⑤ | | ⑥ | ⑦ | | ⑧ | | ⑨ | ⑩ | ⑪ | ⑫ |
| DSP | 30 | 16 | 06 | — | 050 | — | M | N | — | N | — | N | X | N | N |
| DSP | 30 | 16 | 06 | | 050: 50 mm<br>100: 100 mm<br>150: 150 mm<br>200: 200 mm<br>250: 250 mm | | M: Straight shaft (standard) | N: End face tap (standard)<br>A: Outer diameter threading<br>B: Inner diameter threading | | N: None | | N: No surface treatment<br>S: With surface treatment (THK AP-C treatment) | X | N: None | N: None |

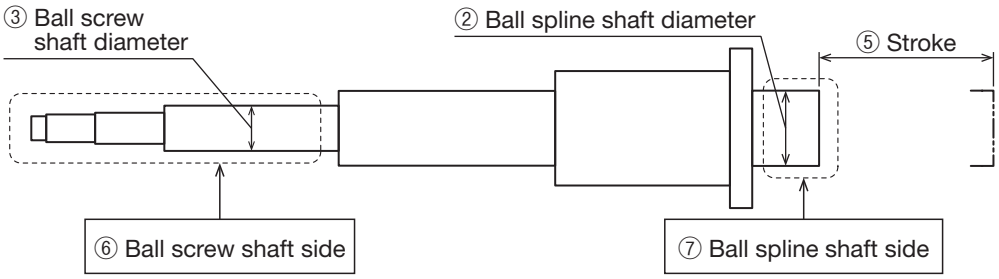


### Shaft End Shape

| ⑥ Ball screw shaft side | ⑦ Ball spline shaft side | | |
|---|---|---|---|
| Symbol: M | Symbol: N | Symbol: A | Symbol: B |
| Straight shaft | End face tap (standard) | Outer diameter threading | Inner diameter threading |
| 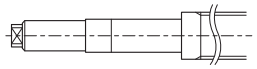 | 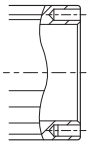 | 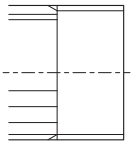 | 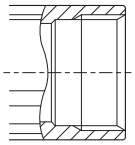 |

## Basic Specifications

| | | |
|---|---|---|
| DSP | Constant axial load (kN)* | 1.6 |
| | Instantaneous axial load (kN)* | 3.3 |
| Ball screw | Ball screw lead (mm) | 6 |
| | Basic dynamic load rating Ca (kN) | 9.7 |
| | Basic static load rating $C_0a$ (kN) | 18.3 |
| | Ball screw shaft diameter (mm) | $\phi$16 |
| | Ball screw shaft thread minor diameter (mm) | $\phi$13.2 |
| | Ball center-to-center diameter (mm) | $\phi$16.8 |
| | Axial clearance (mm) | 0.010 max (G1) |
| | Accuracy grade | C5 |
| | DN value | 70000 |
| Ball spline | Basic dynamic load rating C (kN) | 20.5 |
| | Basic static load rating $C_0$ (kN) | 34 |
| | Ball spline shaft diameter (mm) | $\phi$30 |
| | Clearance in the rotational direction (mm) | -0.010 to -0.004 (CL: light preload) |

* This value is estimated. Please consider the strength of the mounting part.

## Maintenance

For the ball screw, apply grease directly to the screw shaft.
For the ball spline, replenish lubricant from the oil hole of the ball spline nut and apply grease directly to the ball spline shaft.

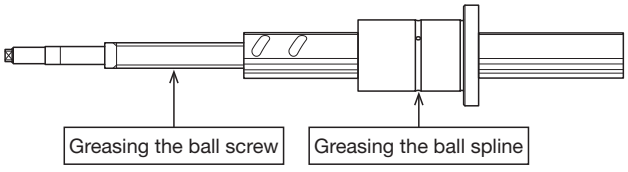

# Dimensions

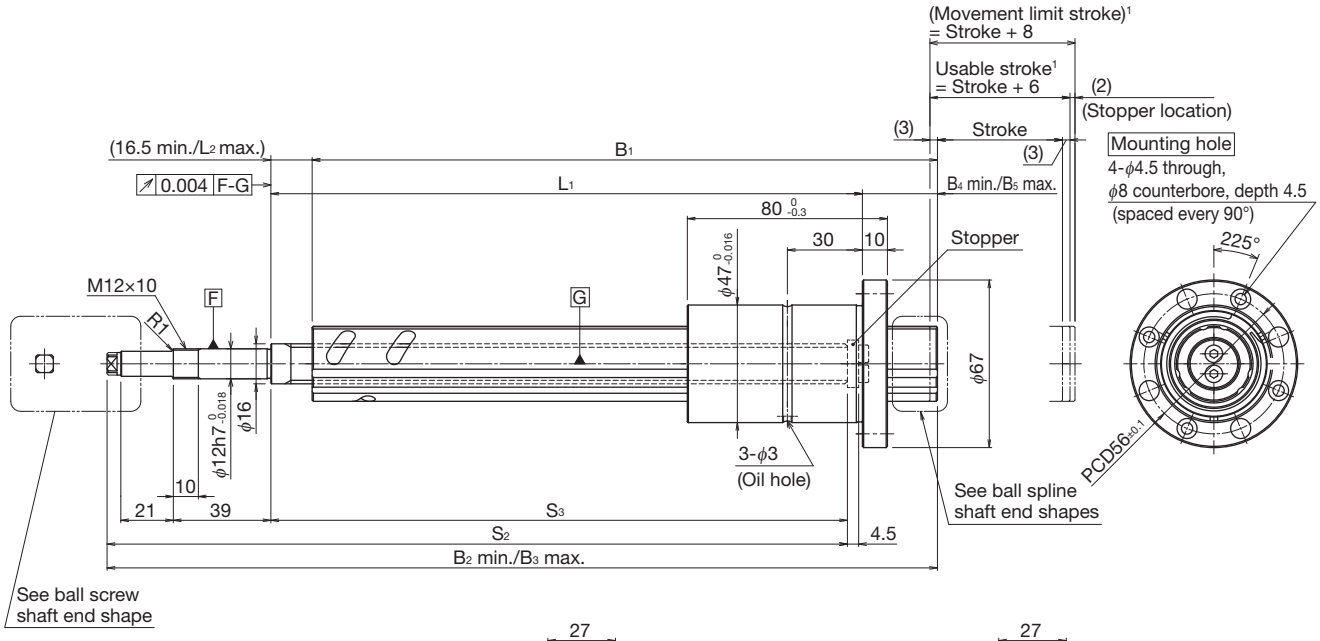


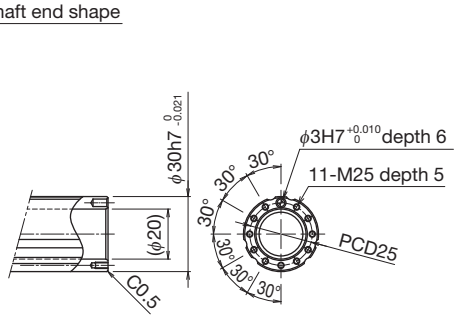


Ball spline
shaft end shape: N
End face tap (standard)

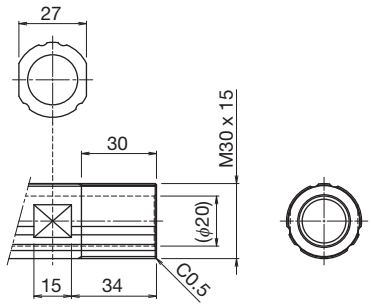


Ball spline
shaft end shape: A
Outer diameter threading

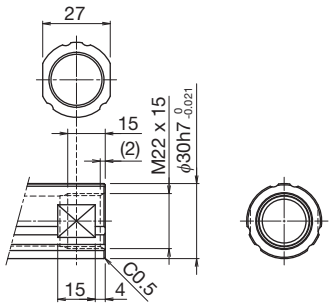


Ball spline
shaft end shape: B
Inner diameter threading

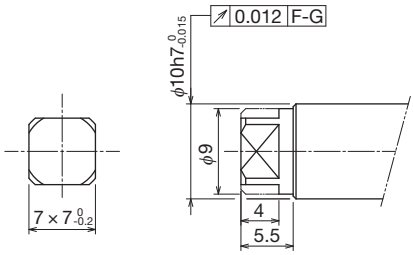


Ball screw shaft end shape

[1] Use the product within the usable stroke range.

| Stroke (mm) (Max. usable stroke) | | 50 (56) | | | 100 (106) | | | 150 (156) | | | 200 (206) | | | 250 (256) | | |
|---|---|---|---|---|---|---|---|---|---|---|---|---|---|---|---|---|
| Dimensions (mm) | $L_1$ | 136.5 | | | 186.5 | | | 236.5 | | | 286.5 | | | 336.5 | | |
| | $L_2$ | 66.5 | | | 116.5 | | | 166.5 | | | 216.5 | | | 266.5 | | |
| Ball screw shaft dimensions (mm) | $S_2$ | 196 | | | 246 | | | 296 | | | 346 | | | 396 | | |
| | $S_3$ | 130.5 | | | 180.5 | | | 230.5 | | | 280.5 | | | 330.5 | | |
| Ball spline shaft end shape[2] | | N | A | B | N | A | B | N | A | B | N | A | B | N | A | B |
| Ball spline shaft dimensions (mm) | $B_1$ | 150 | 185 | 155 | 200 | 235 | 205 | 250 | 285 | 255 | 300 | 335 | 305 | 350 | 385 | 355 |
| | $B_2$ | 232 | 267 | 237 | 282 | 317 | 287 | 332 | 367 | 337 | 382 | 417 | 387 | 432 | 467 | 437 |
| | $B_3$ | 282 | 317 | 287 | 382 | 417 | 387 | 482 | 517 | 487 | 582 | 617 | 587 | 682 | 717 | 687 |
| | $B_4$ | 30 | 65 | 35 | 30 | 65 | 35 | 30 | 65 | 35 | 30 | 65 | 35 | 30 | 65 | 35 |
| | $B_5$ | 80 | 115 | 85 | 130 | 165 | 135 | 180 | 215 | 185 | 230 | 265 | 235 | 280 | 315 | 285 |
| Mass (kg) | | 1.3 | | | 1.5 | | | 1.8 | | | 2 | | | 2.2 | | |

[2] Ball spline shaft end shapes: N: End face tap (standard), A: Outer diameter threading, B: Inner diameter threading.

# DSP40 2006

## Model Number Coding

| Model | Ball spline shaft diameter | Ball screw shaft diameter | Ball screw lead | | Stroke | | Shaft end shape | | Options | | Customization 1 (Surface treatment) | Customization 2 | Customization 3 | Customization 4 |
|---|---|---|---|---|---|---|---|---|---|---|---|---|---|---|
| | | | | | | | Ball screw shaft side | Ball spline shaft side | | | | | | |
| ① | ② | ③ | ④ | | ⑤ | | ⑥ | ⑦ | ⑧ | | ⑨ | ⑩ | ⑪ | ⑫ |
| DSP | 40 | 20 | 06 | – | 050 | – | M | N | N | – | N | X | N | N |
| DSP | 40 | 20 | 06 | | 050: 50 mm<br>100: 100 mm<br>150: 150 mm<br>200: 200 mm<br>250: 250 mm | | M: Straight shaft (standard) | N: End face tap (standard)<br>A: Outer diameter threading<br>B: Inner diameter threading | N: None | | N: No surface treatment<br>S: With surface treatment (THK AP-C treatment) | X | N: None | N: None |

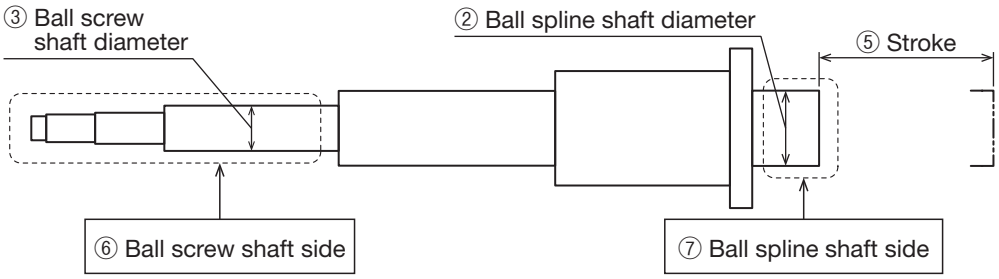


### Shaft End Shape

| ⑥ Ball screw shaft side | ⑦ Ball spline shaft side | | |
|---|---|---|---|
| Symbol: M | Symbol: N | Symbol: A | Symbol: B |
| Straight shaft | End face tap (standard) | Outer diameter threading | Inner diameter threading |

## Basic Specifications

| | | |
|---|---|---|
| DSP | Constant axial load (kN)* | 3.2 |
| | Instantaneous axial load (kN)* | 6.4 |
| Ball screw | Ball screw lead (mm) | 6 |
| | Basic dynamic load rating Ca (kN) | 17.7 |
| | Basic static load rating $C_0a$ (kN) | 35.8 |
| | Ball screw shaft diameter (mm) | $\phi$20 |
| | Ball screw shaft thread minor diameter (mm) | $\phi$16.4 |
| | Ball center-to-center diameter (mm) | $\phi$21 |
| | Axial clearance (mm) | 0.010 max (G1) |
| | Accuracy grade | C5 |
| | DN value | 70000 |
| Ball spline | Basic dynamic load rating C (kN) | 37.8 |
| | Basic static load rating $C_0$ (kN) | 60.5 |
| | Ball spline shaft diameter (mm) | $\phi$40 |
| | Clearance in the rotational direction (mm) | -0.016 to -0.008 (CL: light preload) |

* This value is estimated. Please consider the strength of the mounting part.

## Maintenance

For the ball screw, apply grease directly to the screw shaft.
For the ball spline, replenish lubricant from the oil hole of the ball spline nut and apply grease directly to the ball spline shaft.

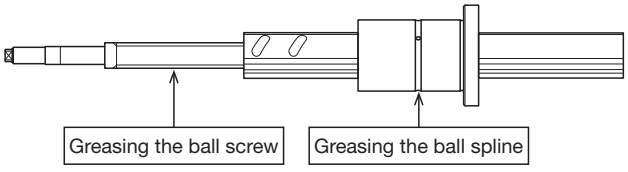

# Dimensions

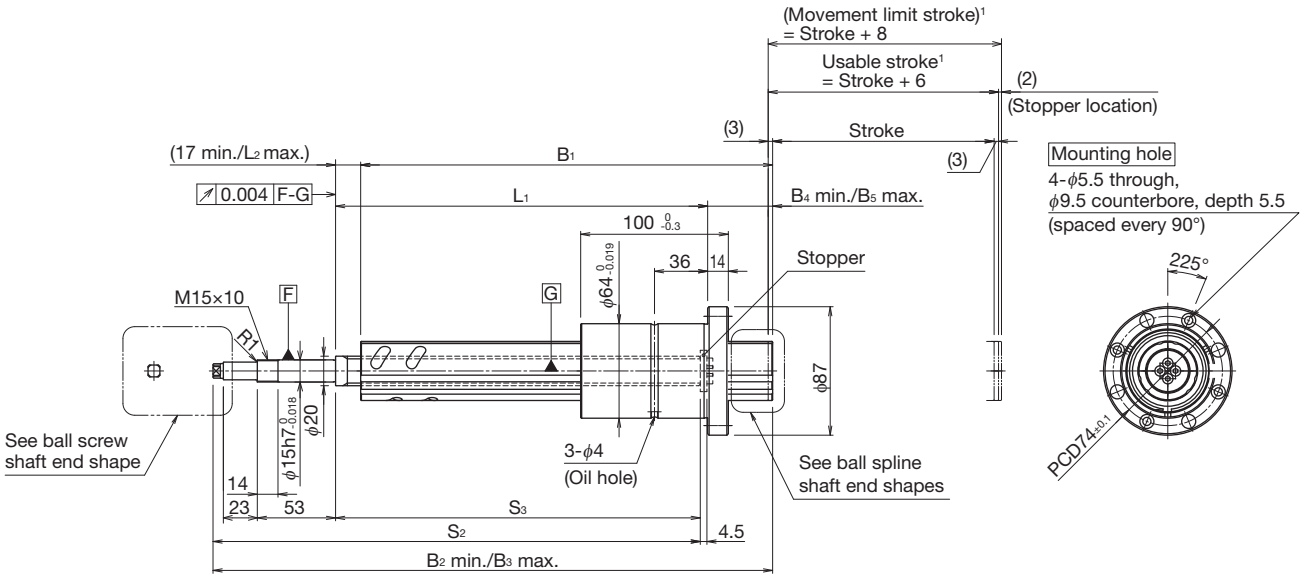


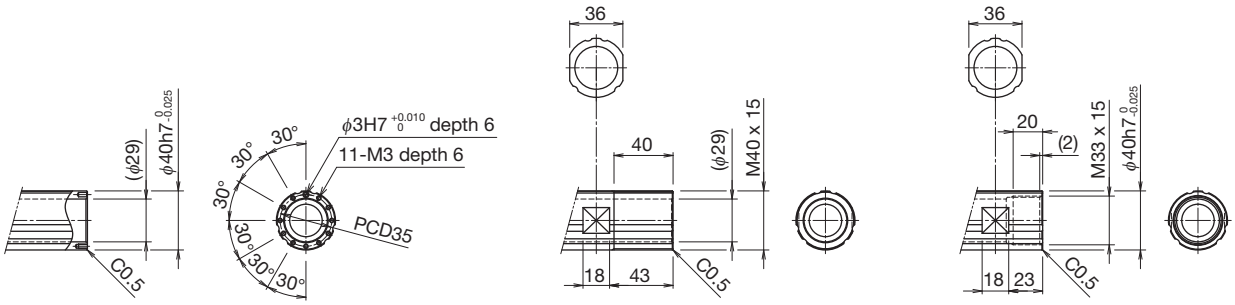


Ball spline
shaft end shape: N
End face tap (standard)

Ball spline
shaft end shape: A
Outer diameter threading

Ball spline
shaft end shape: B
Inner diameter threading

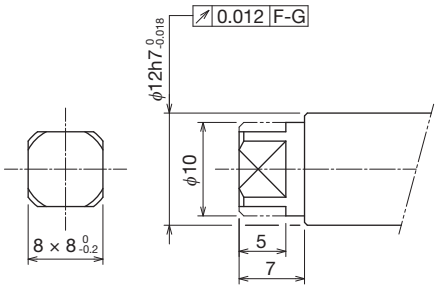


Ball screw shaft end shape

[1] Use the product within the usable stroke range.

| Stroke (mm) (Max. usable stroke) | | 50 (56) | | | 100 (106) | | | 150 (156) | | | 200 (206) | | | 250 (256) | | |
|---|---|---|---|---|---|---|---|---|---|---|---|---|---|---|---|---|
| Dimensions (mm) | $L_1$ | 152 | | | 202 | | | 252 | | | 302 | | | 352 | | |
| | $L_2$ | 67 | | | 117 | | | 167 | | | 217 | | | 267 | | |
| Ball screw shaft dimensions (mm) | $S_2$ | 230 | | | 280 | | | 330 | | | 380 | | | 430 | | |
| | $S_3$ | 147 | | | 197 | | | 247 | | | 297 | | | 347 | | |
| Ball spline shaft end shape[2] | | N | A | B | N | A | B | N | A | B | N | A | B | N | A | B |
| Ball spline shaft dimensions (mm) | $B_1$ | 179 | 216 | 196 | 229 | 266 | 246 | 279 | 316 | 296 | 329 | 366 | 346 | 379 | 416 | 396 |
| | $B_2$ | 279 | 316 | 296 | 329 | 366 | 346 | 379 | 416 | 396 | 429 | 466 | 446 | 479 | 516 | 496 |
| | $B_3$ | 329 | 366 | 346 | 429 | 466 | 446 | 529 | 566 | 546 | 629 | 666 | 646 | 729 | 766 | 746 |
| | $B_4$ | 44 | 81 | 61 | 44 | 81 | 61 | 44 | 81 | 61 | 44 | 81 | 61 | 44 | 81 | 61 |
| | $B_5$ | 94 | 131 | 111 | 144 | 181 | 161 | 194 | 231 | 211 | 244 | 281 | 261 | 294 | 331 | 311 |
| Mass (kg) | | 2.7 | | | 3.1 | | | 3.4 | | | 3.8 | | | 4.1 | | |

[2] Ball spline shaft end shapes: N: End face tap (standard), A: Outer diameter threading, B: Inner diameter threading.

# DSP40 2508

## Model Number Coding

| Model | Ball spline shaft diameter | Ball screw shaft diameter | Ball screw lead | | Stroke | | Shaft end shape: Ball screw shaft side | Shaft end shape: Ball spline shaft side | | Options | | Customization 1 (Surface treatment) | Customization 2 | Customization 3 | Customization 4 |
|---|---|---|---|---|---|---|---|---|---|---|---|---|---|---|---|
| ① | ② | ③ | ④ | | ⑤ | | ⑥ | ⑦ | | ⑧ | | ⑨ | ⑩ | ⑪ | ⑫ |
| DSP | 40 | 25 | 08 | — | 050 | — | M | N | — | N | — | N | X | N | N |
| DSP | 40 | 25 | 08 | | 050: 50 mm<br>100: 100 mm<br>150: 150 mm<br>200: 200 mm<br>250: 250 mm | | M: Straight shaft (standard) | N: End face tap (standard)<br>A: Outer diameter threading<br>B: Inner diameter threading | | N: None | | N: No surface treatment<br>S: With surface treatment (THK AP-C treatment) | X | N: None | N: None |

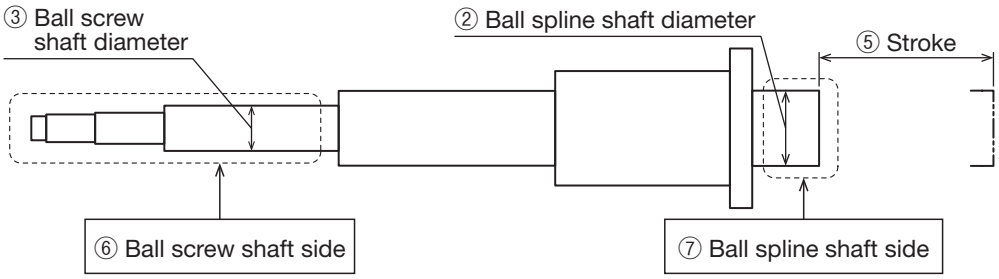


### Shaft End Shape

| ⑥ Ball screw shaft side | ⑦ Ball spline shaft side | | |
|---|---|---|---|
| Symbol: M | Symbol: N | Symbol: A | Symbol: B |
| Straight shaft | End face tap (standard) | Outer diameter threading | Inner diameter threading |

## Basic Specifications

| | | |
|---|---|---|
| DSP | Constant axial load (kN)* | 5.6 |
| | Instantaneous axial load (kN)* | 11.2 |
| Ball screw | Ball screw lead (mm) | 8 |
| | Basic dynamic load rating Ca (kN) | 30.4 |
| | Basic static load rating $C_0a$ (kN) | 75 |
| | Ball screw shaft diameter (mm) | $\phi$25 |
| | Ball screw shaft thread minor diameter (mm) | $\phi$21.4 |
| | Ball center-to-center diameter (mm) | $\phi$26 |
| | Axial clearance (mm) | 0.010 max (G1) |
| | Accuracy grade | C5 |
| | DN value | 70000 |
| Ball spline | Basic dynamic load rating C (kN) | 37.8 |
| | Basic static load rating $C_0$ (kN) | 60.5 |
| | Ball spline shaft diameter (mm) | $\phi$40 |
| | Clearance in the rotational direction (mm) | -0.016 to -0.008 (CL: light preload) |

* This value is estimated. Please consider the strength of the mounting part.

## Maintenance

For the ball screw, apply grease directly to the screw shaft.
For the ball spline, replenish lubricant from the oil hole of the ball spline nut and apply grease directly to the ball spline shaft.

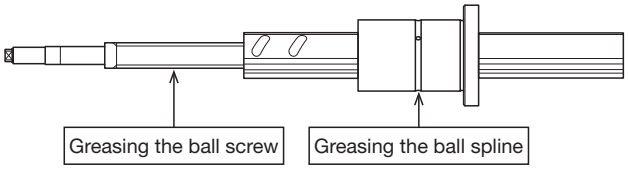

# Dimensions

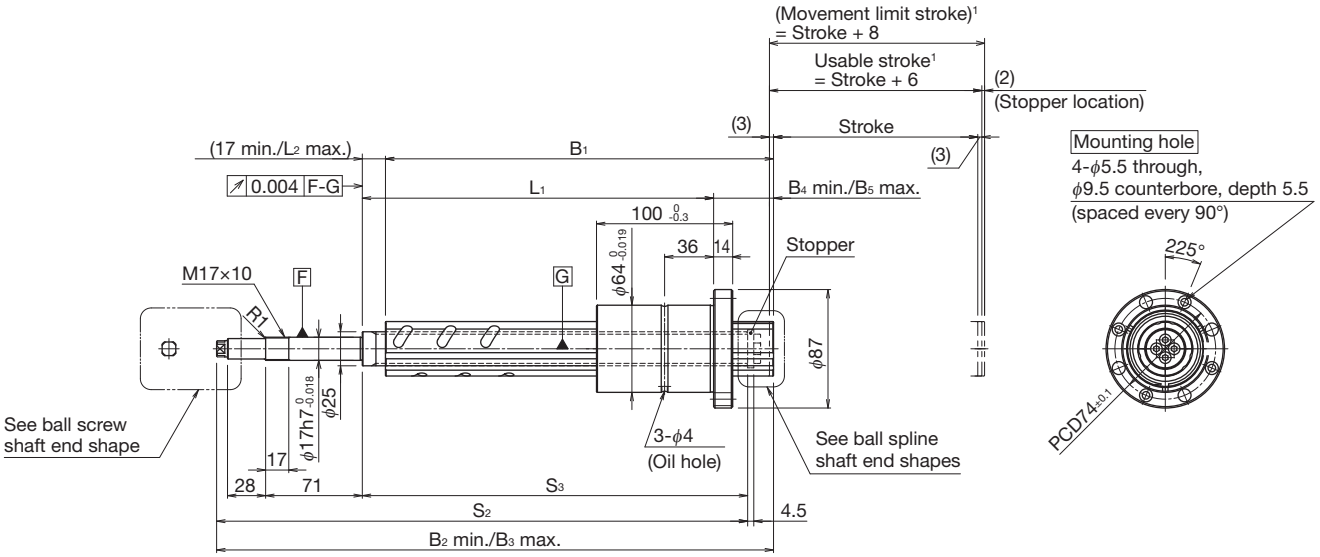


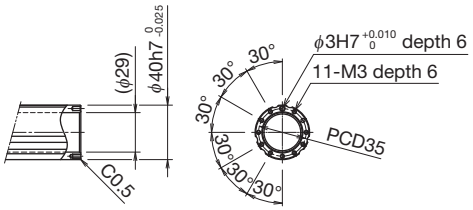


Ball spline
shaft end shape: N
End face tap (standard)

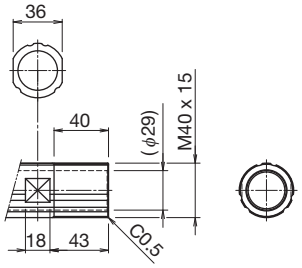


Ball spline
shaft end shape: A
Outer diameter threading

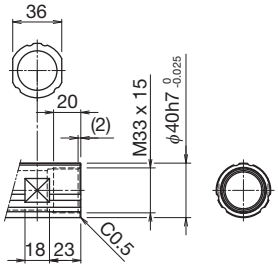


Ball spline
shaft end shape: B
Inner diameter threading

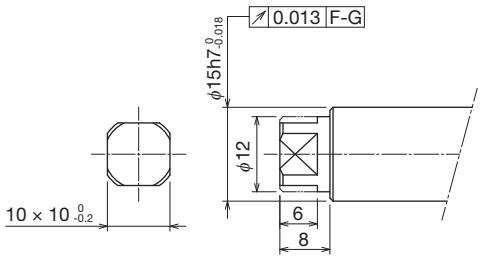


Ball screw shaft end shape

[1] Use the product within the usable stroke range.

| Stroke (mm) (Max. usable stroke) | | 50 (56) | | | 100 (106) | | | 150 (156) | | | 200 (206) | | | 250 (256) | | |
|---|---|---|---|---|---|---|---|---|---|---|---|---|---|---|---|---|
| Dimensions (mm) | $L_1$ | 158 | | | 208 | | | 258 | | | 308 | | | 358 | | |
| | $L_2$ | 67 | | | 117 | | | 167 | | | 217 | | | 267 | | |
| Ball screw shaft dimensions (mm) | $S_2$ | 290 | | | 340 | | | 390 | | | 440 | | | 490 | | |
| | $S_3$ | 183 | | | 233 | | | 283 | | | 333 | | | 383 | | |
| Ball spline shaft end shape[2] | | N | A | B | N | A | B | N | A | B | N | A | B | N | A | B |
| Ball spline shaft dimensions (mm) | $B_1$ | 185 | 222 | 202 | 235 | 272 | 252 | 285 | 322 | 302 | 335 | 372 | 352 | 385 | 422 | 402 |
| | $B_2$ | 309 | 346 | 326 | 359 | 396 | 376 | 409 | 446 | 426 | 459 | 496 | 476 | 509 | 546 | 526 |
| | $B_3$ | 359 | 396 | 376 | 459 | 496 | 476 | 559 | 596 | 576 | 659 | 696 | 676 | 759 | 796 | 776 |
| | $B_4$ | 44 | 81 | 61 | 44 | 81 | 61 | 44 | 81 | 61 | 44 | 81 | 61 | 44 | 81 | 61 |
| | $B_5$ | 94 | 131 | 111 | 144 | 181 | 161 | 194 | 231 | 211 | 244 | 281 | 261 | 294 | 331 | 311 |
| Mass (kg) | | 3.1 | | | 3.5 | | | 4 | | | 4.4 | | | 4.8 | | |

[2] Ball spline shaft end shapes: N: End face tap (standard), A: Outer diameter threading, B: Inner diameter threading.

# DSP50 3206

## Model Number Coding

| Model | Ball spline shaft diameter | Ball screw shaft diameter | Ball screw lead | | Stroke | | Shaft end shape | | Options | | Customization 1 (Surface treatment) | Customization 2 | Customization 3 | Customization 4 |
|---|---|---|---|---|---|---|---|---|---|---|---|---|---|---|
| | | | | | | | Ball screw shaft side | Ball spline shaft side | | | | | | |
| ① | ② | ③ | ④ | | ⑤ | | ⑥ | ⑦ | ⑧ | | ⑨ | ⑩ | ⑪ | ⑫ |
| DSP | 50 | 32 | 06 | – | 050 | – | M | N | N | – | N | X | N | N |
| DSP | 50 | 32 | 06 | | 050: 50 mm<br>100: 100 mm<br>150: 150 mm<br>200: 200 mm<br>250: 250 mm | | M: Straight shaft (standard) | N: End face tap (standard)<br>A: Outer diameter threading<br>B: Inner diameter threading | N: None | | N: No surface treatment<br>S: With surface treatment (THK AP-C treatment) | X | N: None | N: None |

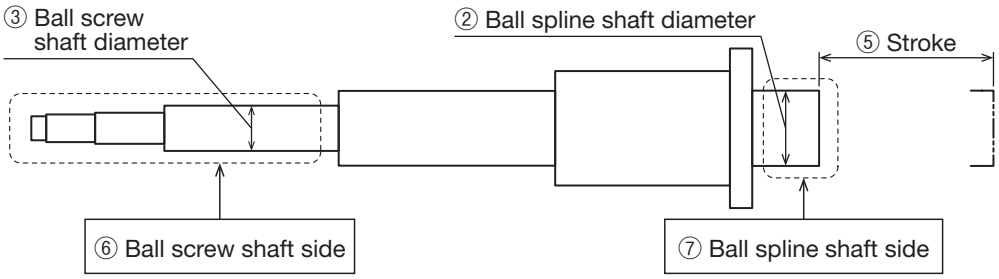


### Shaft End Shape

| ⑥ Ball screw shaft side | ⑦ Ball spline shaft side | | |
|---|---|---|---|
| Symbol: M | Symbol: N | Symbol: A | Symbol: B |
| Straight shaft | End face tap (standard) | Outer diameter threading | Inner diameter threading |

## Basic Specifications

| | | |
|---|---|---|
| DSP | Constant axial load (kN)* | 8.4 |
| | Instantaneous axial load (kN)* | 16.8 |
| Ball screw | Ball screw lead (mm) | 6 |
| | Basic dynamic load rating Ca (kN) | 49.3 |
| | Basic static load rating $C_0a$ (kN) | 149.4 |
| | Ball screw shaft diameter (mm) | $\phi$32 |
| | Ball screw shaft thread minor diameter (mm) | $\phi$28.4 |
| | Ball center-to-center diameter (mm) | $\phi$33 |
| | Axial clearance (mm) | 0.010 max (G1) |
| | Accuracy grade | C5 |
| | DN value | 70000 |
| Ball spline | Basic dynamic load rating C (kN) | 60.9 |
| | Basic static load rating $C_0$ (kN) | 94.5 |
| | Ball spline shaft diameter (mm) | $\phi$50 |
| | Clearance in the rotational direction (mm) | -0.016 to -0.008 (CL: light preload) |

* This value is estimated. Please consider the strength of the mounting part.

## Maintenance

For the ball screw, apply grease directly to the screw shaft.
For the ball spline, replenish lubricant from the oil hole of the ball spline nut and apply grease directly to the ball spline shaft.

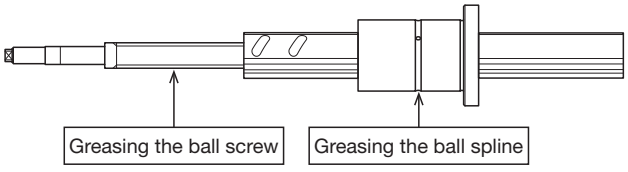

# Dimensions

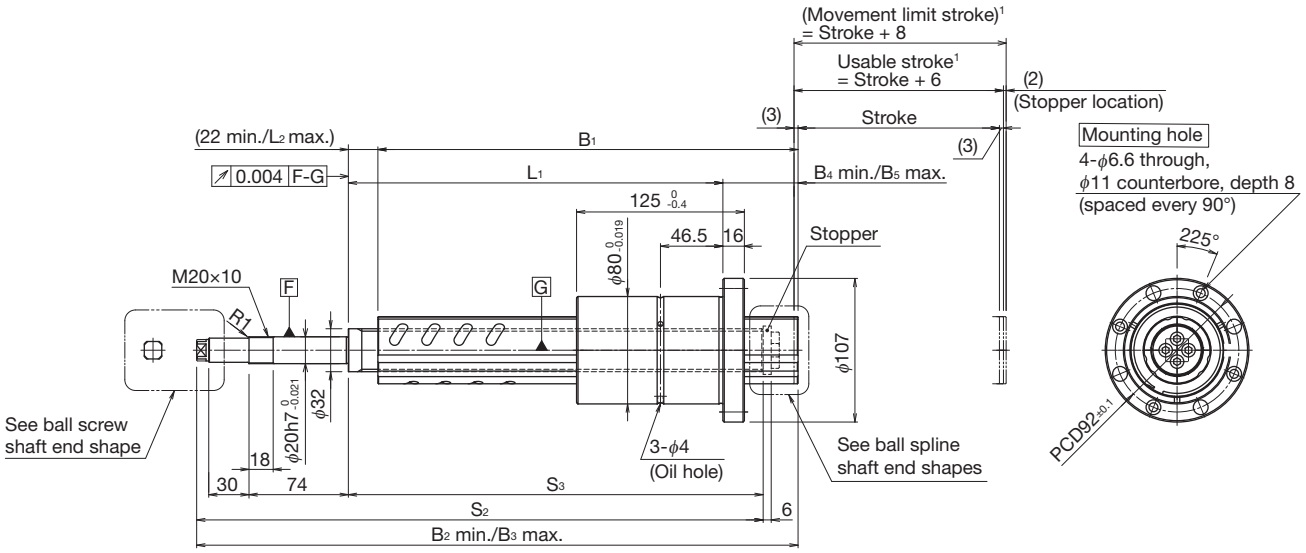


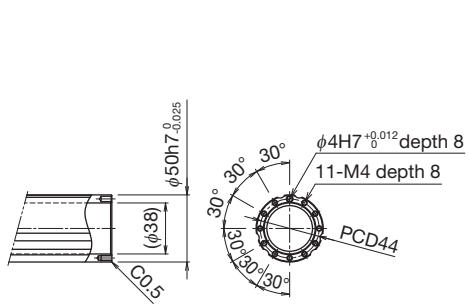


Ball spline
shaft end shape: N
End face tap (standard)

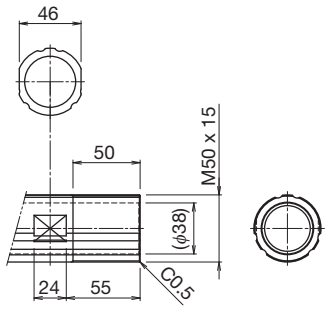


Ball spline
shaft end shape: A
Outer diameter threading

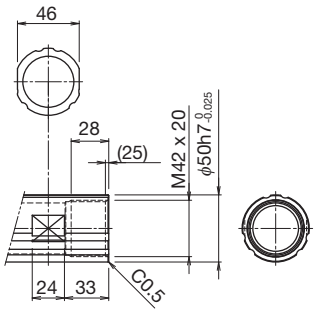


Ball spline
shaft end shape: B
Inner diameter threading

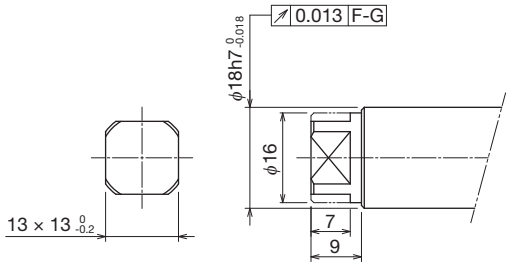


Ball screw shaft end shape

[1] Use the product within the usable stroke range.

| Stroke (mm) (Max. usable stroke) | | 50 (56) | | | 100 (106) | | | 150 (156) | | | 200 (206) | | | 250 (256) | | |
|---|---|---|---|---|---|---|---|---|---|---|---|---|---|---|---|---|
| Dimensions (mm) | $L_1$ | 179 | | | 229 | | | 279 | | | 329 | | | 379 | | |
| | $L_2$ | 72 | | | 122 | | | 172 | | | 222 | | | 272 | | |
| Ball screw shaft dimensions (mm) | $S_2$ | 322 | | | 372 | | | 422 | | | 472 | | | 522 | | |
| | $S_3$ | 209 | | | 259 | | | 309 | | | 359 | | | 409 | | |
| Ball spline shaft end shape[2] | | N | A | B | N | A | B | N | A | B | N | A | B | N | A | B |
| Ball spline shaft dimensions (mm) | $B_1$ | 213 | 258 | 236 | 263 | 308 | 286 | 313 | 358 | 336 | 363 | 408 | 386 | 413 | 458 | 436 |
| | $B_2$ | 348 | 393 | 371 | 398 | 443 | 421 | 448 | 493 | 471 | 498 | 543 | 521 | 548 | 593 | 571 |
| | $B_3$ | 398 | 443 | 421 | 498 | 543 | 521 | 598 | 643 | 621 | 698 | 743 | 721 | 798 | 843 | 821 |
| | $B_4$ | 56 | 101 | 79 | 56 | 101 | 79 | 56 | 101 | 79 | 56 | 101 | 79 | 56 | 101 | 79 |
| | $B_5$ | 106 | 151 | 129 | 156 | 201 | 179 | 206 | 251 | 229 | 256 | 301 | 279 | 306 | 351 | 329 |
| Mass (kg) | | 5.5 | | | 6.2 | | | 6.8 | | | 7.5 | | | 8.1 | | |

[2] Ball spline shaft end shapes: N: End face tap (standard), A: Outer diameter threading, B: Inner diameter threading.

# DSP60 3610

## Model Number Coding

| Model | Ball spline shaft diameter | Ball screw shaft diameter | Ball screw lead | | Stroke | | Shaft end shape | | Options | | Customization 1 (Surface treatment) | Customization 2 | Customization 3 | Customization 4 |
|---|---|---|---|---|---|---|---|---|---|---|---|---|---|---|
| ① | ② | ③ | ④ | | ⑤ | | ⑥ Ball screw shaft side | ⑦ Ball spline shaft side | ⑧ | | ⑨ | ⑩ | ⑪ | ⑫ |
| DSP | 60 | 36 | 10 | – | 050 | – | M | N | N | – | N | X | N | N |
| DSP | 60 | 36 | 10 | | 050: 50 mm<br>100: 100 mm<br>150: 150 mm<br>200: 200 mm<br>250: 250 mm | | M: Straight shaft (standard) | N: End face tap (standard)<br>A: Outer diameter threading<br>B: Inner diameter threading | N: None | | N: No surface treatment<br>S: With surface treatment (THK AP-C treatment) | X | N: None | N: None |

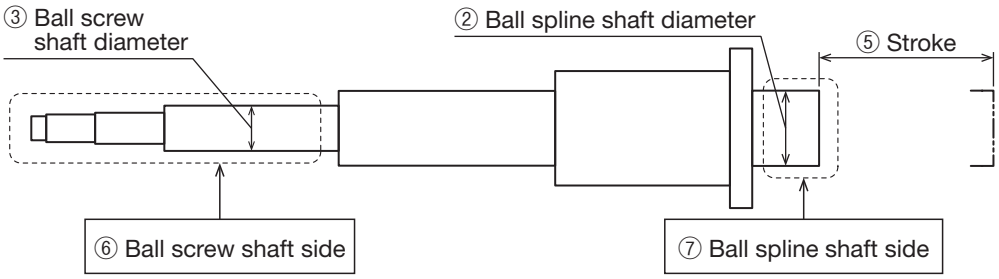


### Shaft End Shape

| ⑥ Ball screw shaft side | ⑦ Ball spline shaft side | | |
|---|---|---|---|
| Symbol: M | Symbol: N | Symbol: A | Symbol: B |
| Straight shaft | End face tap (standard) | Outer diameter threading | Inner diameter threading |

## Basic Specifications

| | | |
|---|---|---|
| DSP | Constant axial load (kN)* | 10.9 |
| | Instantaneous axial load (kN)* | 21.8 |
| Ball screw | Ball screw lead (mm) | 10 |
| | Basic dynamic load rating Ca (kN) | 59.5 |
| | Basic static load rating $C_0a$ (kN) | 148.7 |
| | Ball screw shaft diameter (mm) | $\phi$36 |
| | Ball screw shaft thread minor diameter (mm) | $\phi$30.5 |
| | Ball center-to-center diameter (mm) | $\phi$37.75 |
| | Axial clearance (mm) | 0.010 max (G1) |
| | Accuracy grade | C5 |
| | DN value | 70000 |
| Ball spline | Basic dynamic load rating C (kN) | 73.5 |
| | Basic static load rating $C_0$ (kN) | 111.7 |
| | Ball spline shaft diameter (mm) | $\phi$60 |
| | Clearance in the rotational direction (mm) | -0.022 to -0.012 (CL: light preload) |

* This value is estimated. Please consider the strength of the mounting part.

## Maintenance

For the ball screw, apply grease directly to the screw shaft.
For the ball spline, replenish lubricant from the oil hole of the ball spline nut and apply grease directly to the ball spline shaft.

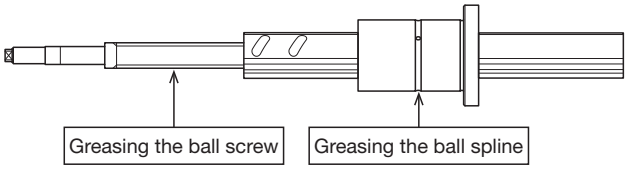

# Dimensions

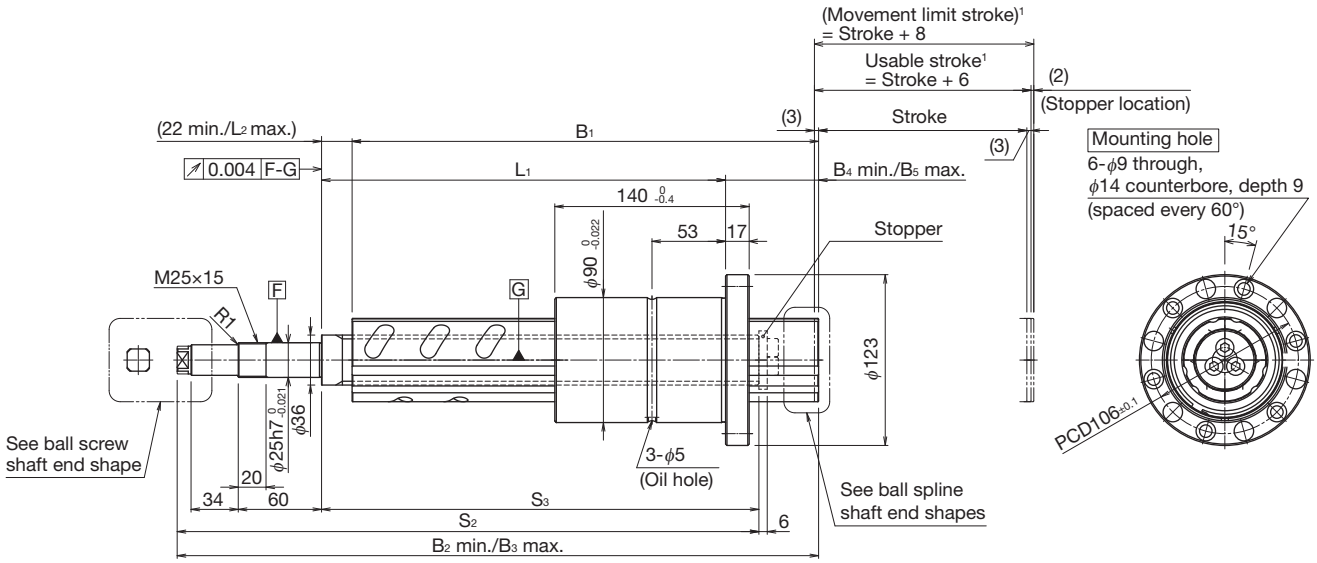


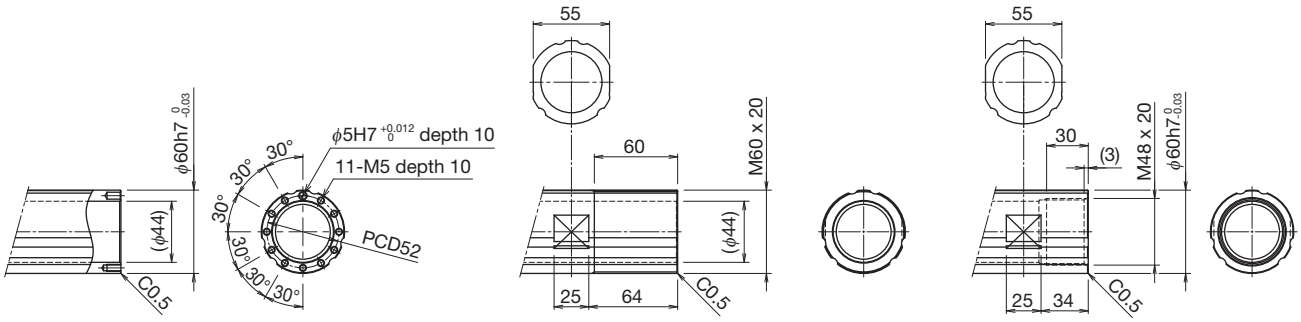


Ball spline
shaft end shape: N
End face tap (standard)

Ball spline
shaft end shape: A
Outer diameter threading

Ball spline
shaft end shape: B
Inner diameter threading

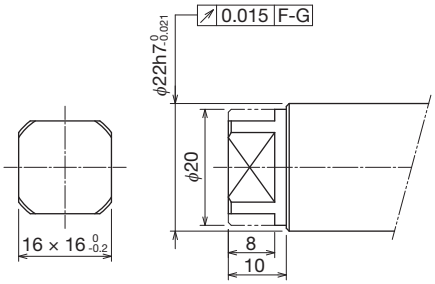


Ball screw shaft end shape

[1] Use the product within the usable stroke range.

| Stroke (mm) (Max. usable stroke) | | 50 (56) | | | 100 (106) | | | 150 (156) | | | 200 (206) | | | 250 (256) | | |
|---|---|---|---|---|---|---|---|---|---|---|---|---|---|---|---|---|
| Dimensions (mm) | $L_1$ | 191 | | | 241 | | | 291 | | | 341 | | | 391 | | |
| | $L_2$ | 72 | | | 122 | | | 172 | | | 222 | | | 272 | | |
| Ball screw shaft dimensions (mm) | $S_2$ | 319 | | | 369 | | | 419 | | | 469 | | | 519 | | |
| | $S_3$ | 215 | | | 265 | | | 315 | | | 365 | | | 415 | | |
| Ball spline shaft end shape[2] | | N | A | B | N | A | B | N | A | B | N | A | B | N | A | B |
| Ball spline shaft dimensions (mm) | $B_1$ | 236 | 281 | 251 | 286 | 331 | 301 | 336 | 381 | 351 | 386 | 431 | 401 | 436 | 481 | 451 |
| | $B_2$ | 362 | 407 | 377 | 412 | 457 | 427 | 462 | 507 | 477 | 512 | 557 | 527 | 562 | 607 | 577 |
| | $B_3$ | 412 | 457 | 427 | 512 | 557 | 527 | 612 | 657 | 627 | 712 | 757 | 727 | 812 | 857 | 827 |
| | $B_4$ | 67 | 112 | 82 | 67 | 112 | 82 | 67 | 112 | 82 | 67 | 112 | 82 | 67 | 112 | 82 |
| | $B_5$ | 117 | 162 | 132 | 167 | 212 | 182 | 217 | 262 | 232 | 267 | 312 | 282 | 317 | 362 | 332 |
| Mass (kg) | | 7.8 | | | 8.7 | | | 9.6 | | | 10.6 | | | 11.5 | | |

[2] Ball spline shaft end shapes: N: End face tap (standard), A: Outer diameter threading, B: Inner diameter threading.

# DSP60 3610H

## Model Number Coding

| Model | Ball spline shaft diameter | Ball screw shaft diameter | Ball screw lead | | Stroke | | Shaft end shape: Ball screw shaft side | Shaft end shape: Ball spline shaft side | | Options | | Customization 1 (Surface treatment) | Customization 2 | Customization 3 | Customization 4 |
|---|---|---|---|---|---|---|---|---|---|---|---|---|---|---|---|
| ① | ② | ③ | ④ | | ⑤ | | ⑥ | ⑦ | | ⑧ | | ⑨ | ⑩ | ⑪ | ⑫ |
| DSP | 60 | 36 | 10H | — | 050 | — | M | N | — | N | — | N | X | N | N |
| DSP | 60 | 36 | 10H | | 050: 50 mm<br>100: 100 mm<br>150: 150 mm<br>200: 200 mm<br>250: 250 mm | | M: Straight shaft (standard) | N: End face tap (standard)<br>A: Outer diameter threading<br>B: Inner diameter threading | | N: None | | N: No surface treatment<br>S: With surface treatment (THK AP-C treatment) | X | N: None | N: None |

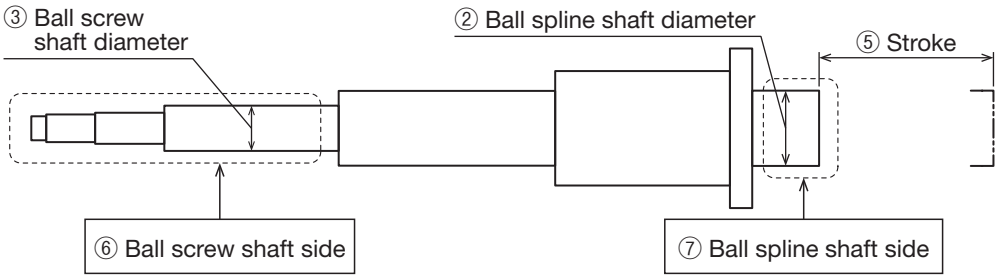


### Shaft End Shape

| ⑥ Ball screw shaft side | ⑦ Ball spline shaft side | | |
|---|---|---|---|
| Symbol: M | Symbol: N | Symbol: A | Symbol: B |
| Straight shaft | End face tap (standard) | Outer diameter threading | Inner diameter threading |

## Basic Specifications

| | | |
|---|---|---|
| DSP | Constant axial load (kN)* | 17.8 |
| | Instantaneous axial load (kN)* | 35.6 |
| Ball screw | Ball screw lead (mm) | 10 |
| | Basic dynamic load rating Ca (kN) | 80.9 |
| | Basic static load rating $C_0a$ (kN) | 212.5 |
| | Ball screw shaft diameter (mm) | $\phi$36 |
| | Ball screw shaft thread minor diameter (mm) | $\phi$30.5 |
| | Ball center-to-center diameter (mm) | $\phi$37.75 |
| | Axial clearance (mm) | 0.010 max (G1) |
| | Accuracy grade | C5 |
| | DN value | 70000 |
| Ball spline | Basic dynamic load rating C (kN) | 73.5 |
| | Basic static load rating $C_0$ (kN) | 111.7 |
| | Ball spline shaft diameter (mm) | $\phi$60 |
| | Clearance in the rotational direction (mm) | -0.022 to -0.012 (CL: light preload) |

* This value is estimated. Please consider the strength of the mounting part.

## Maintenance

For the ball screw, apply grease directly to the screw shaft.
For the ball spline, replenish lubricant from the oil hole of the ball spline nut and apply grease directly to the ball spline shaft.

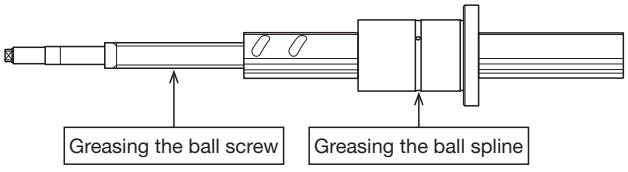

# Dimensions

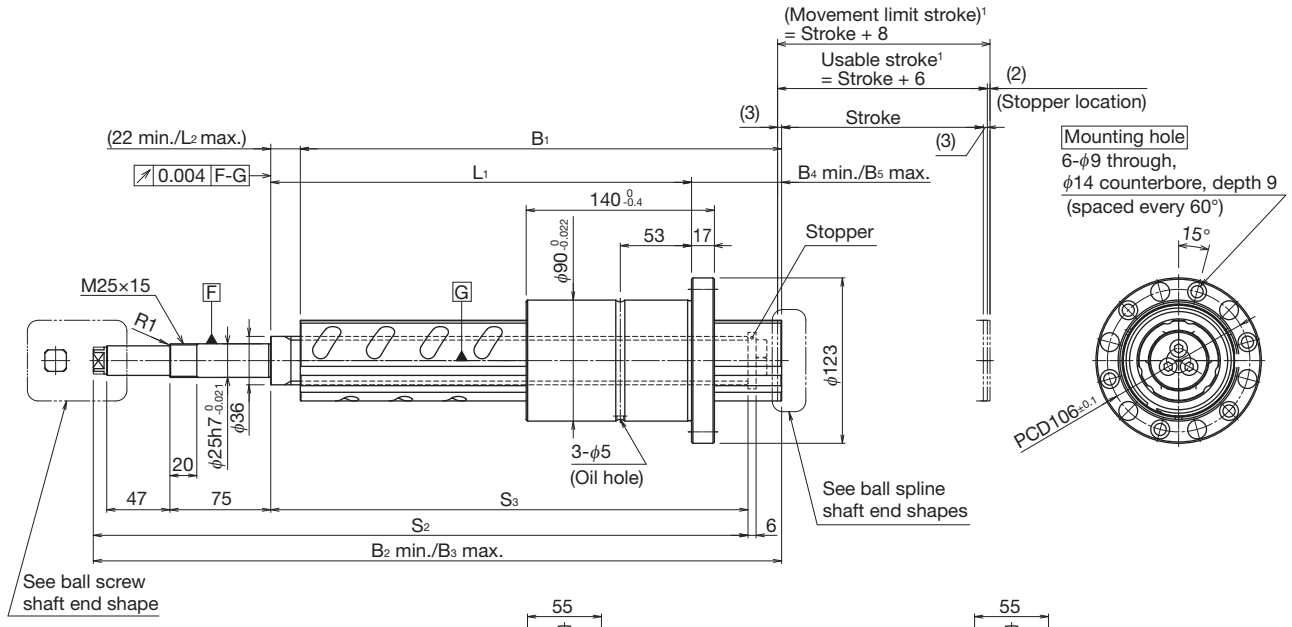


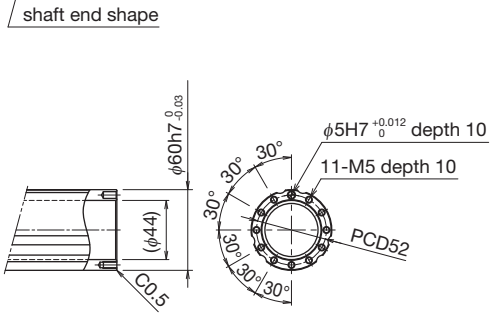


Ball spline
shaft end shape: N
End face tap (standard)

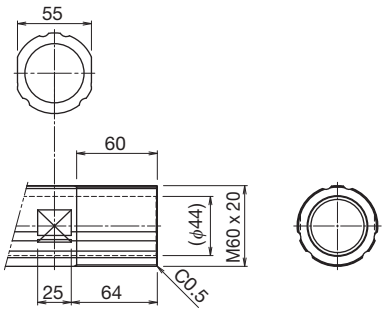


Ball spline
shaft end shape: A
Outer diameter threading

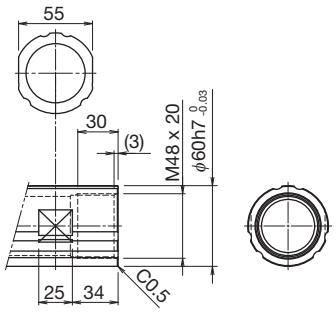


Ball spline
shaft end shape: B
Inner diameter threading

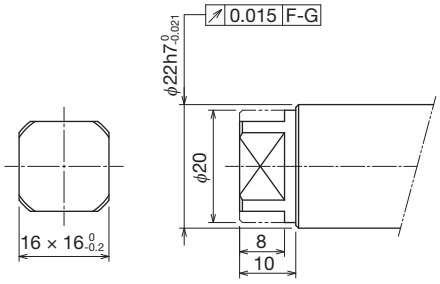


Ball screw shaft end shape

[1] Use the product within the usable stroke range.

| Stroke (mm) (Max. usable stroke) | | 50 (56) | | | 100 (106) | | | 150 (156) | | | 200 (206) | | | 250 (256) | | |
|---|---|---|---|---|---|---|---|---|---|---|---|---|---|---|---|---|
| Dimensions (mm) | $L_1$ | 213 | | | 263 | | | 313 | | | 363 | | | 413 | | |
| | $L_2$ | 72 | | | 122 | | | 172 | | | 222 | | | 272 | | |
| Ball screw shaft dimensions (mm) | $S_2$ | 387 | | | 437 | | | 487 | | | 537 | | | 587 | | |
| | $S_3$ | 255 | | | 305 | | | 355 | | | 405 | | | 455 | | |
| Ball spline shaft end shape[2] | | N | A | B | N | A | B | N | A | B | N | A | B | N | A | B |
| Ball spline shaft dimensions (mm) | $B_1$ | 258 | 303 | 290 | 308 | 353 | 340 | 358 | 403 | 390 | 408 | 453 | 440 | 458 | 503 | 490 |
| | $B_2$ | 412 | 457 | 444 | 462 | 507 | 494 | 512 | 557 | 544 | 562 | 607 | 594 | 612 | 657 | 644 |
| | $B_3$ | 462 | 507 | 494 | 562 | 607 | 594 | 662 | 707 | 694 | 762 | 807 | 794 | 862 | 907 | 894 |
| | $B_4$ | 67 | 112 | 99 | 67 | 112 | 99 | 67 | 112 | 99 | 67 | 112 | 99 | 67 | 112 | 99 |
| | $B_5$ | 117 | 162 | 149 | 167 | 212 | 199 | 217 | 262 | 249 | 267 | 312 | 299 | 317 | 362 | 349 |
| Mass (kg) | | 8.6 | | | 9.5 | | | 10.4 | | | 11.3 | | | 12.2 | | |

[2] Ball spline shaft end shapes: N: End face tap (standard), A: Outer diameter threading, B: Inner diameter threading.

# DSP80 5012

## Model Number Coding

| Model | Ball spline shaft diameter | Ball screw shaft diameter | Ball screw lead | | Stroke | | Shaft end shape: Ball screw shaft side | Shaft end shape: Ball spline shaft side | | Options | | Customization 1 (Surface treatment) | Customization 2 | Customization 3 | Customization 4 |
|---|---|---|---|---|---|---|---|---|---|---|---|---|---|---|---|
| ① | ② | ③ | ④ | | ⑤ | | ⑥ | ⑦ | | ⑧ | | ⑨ | ⑩ | ⑪ | ⑫ |
| DSP | 80 | 50 | 12 | – | 050 | – | M | N | – | N | – | N | X | N | N |
| DSP | 80 | 50 | 12 | | 050: 50 mm<br>100: 100 mm<br>150: 150 mm<br>200: 200 mm<br>250: 250 mm | | M: Straight shaft (standard) | N: Inner diameter threading (standard)<br>A: Outer diameter threading<br>C: End face tap | | N: None | | N: No surface treatment<br>S: With surface treatment (THK AP-C treatment) | X | N: None | N: None |

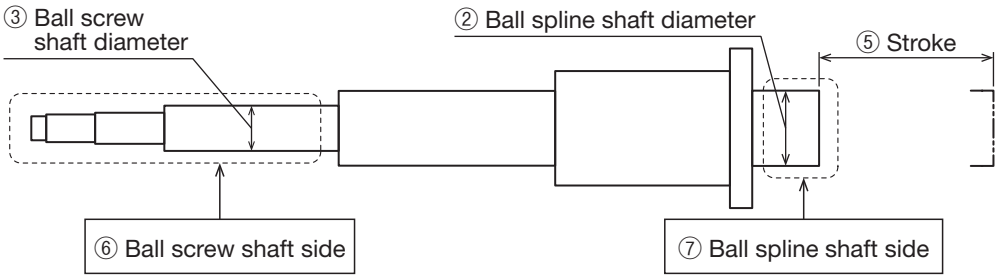


### Shaft End Shape

| ⑥ Ball screw shaft side | ⑦ Ball spline shaft side | | |
|---|---|---|---|
| Symbol: M | Symbol: N | Symbol: A | Symbol: C |
| Straight shaft | Inner diameter threading (standard) | Outer diameter threading | End face tap |

## Basic Specifications

| | | |
|---|---|---|
| DSP | Constant axial load (kN)* | 48 |
| | Instantaneous axial load (kN)* | 120 |
| Ball screw | Ball screw lead (mm) | 12 |
| | Basic dynamic load rating Ca (kN) | 150.7 |
| | Basic static load rating $C_0a$ (kN) | 451.9 |
| | Ball screw shaft diameter (mm) | $\phi$50 |
| | Ball screw shaft thread minor diameter (mm) | $\phi$43.3 |
| | Ball center-to-center diameter (mm) | $\phi$52.25 |
| | Axial clearance (mm) | 0.010 max (G1) |
| | Accuracy grade | C5 |
| | DN value | 70000 |
| Ball spline | Basic dynamic load rating C (kN) | 104.9 |
| | Basic static load rating $C_0$ (kN) | 154.8 |
| | Ball spline shaft diameter (mm) | $\phi$80 |
| | Clearance in the rotational direction (mm) | -0.022 to -0.012 (CL: light preload) |

* This value is estimated. Please consider the strength of the mounting part.

## Maintenance

For the ball screw, apply grease directly to the screw shaft.
For the ball spline, replenish lubricant from the oil hole of the ball spline nut and apply grease directly to the ball spline shaft.

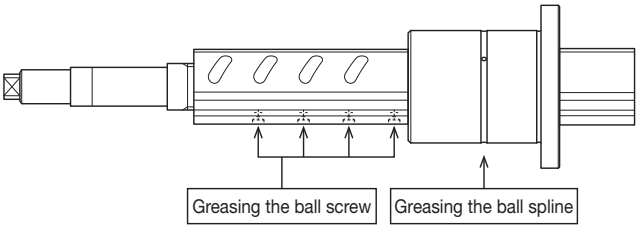

# Dimensions

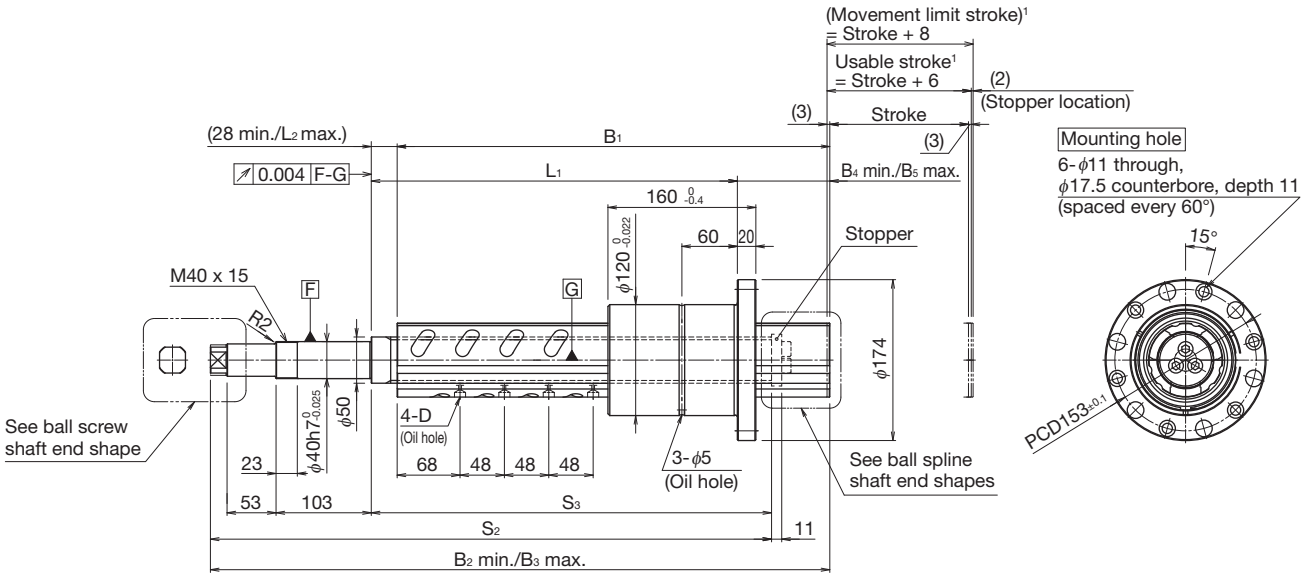


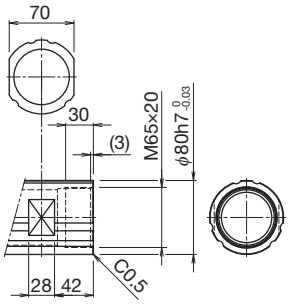


Ball spline
shaft end shape: N
End face tap (standard)

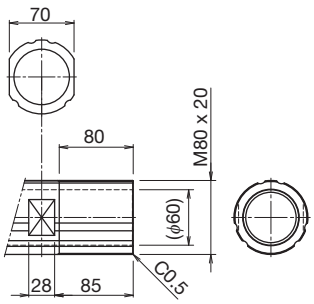


Ball spline
shaft end shape: A
Outer diameter threading

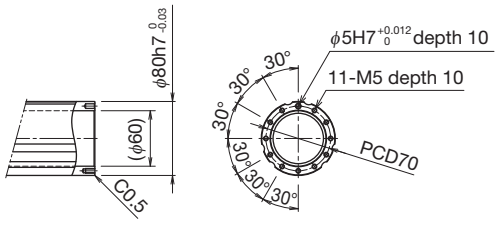


Ball spline
shaft end shape: C
End face tap

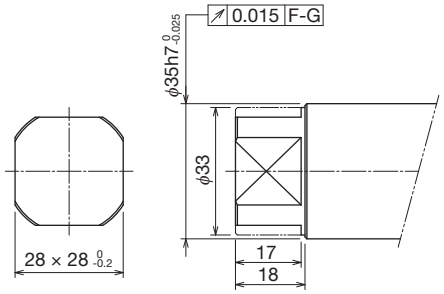


Ball screw shaft end shape

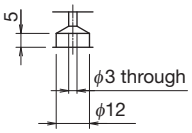


D details (1:1)

[1] Use the product within the usable stroke range.

| Stroke (mm) (Max. usable stroke) | | 50 (56) | | 100 (106) | | 150 (156) | | 200 (206) | | 250 (256) | |
|---|---|---|---|---|---|---|---|---|---|---|---|
| Dimensions (mm) | $L_1$ | 296 | | 346 | | 396 | | 446 | | 496 | |
| | $L_2$ | 78 | | 128 | | 178 | | 228 | | 278 | |
| Ball screw shaft dimensions (mm) | $S_2$ | 507 | | 557 | | 607 | | 657 | | 707 | |
| | $S_3$ | 333 | | 383 | | 433 | | 483 | | 533 | |
| Ball spline shaft end shape[2] | | N/C | A | N/C | A | N/C | A | N/C | A | N/C | A |
| Ball spline shaft dimensions (mm) | $B_1$ | 368 | 411 | 418 | 461 | 468 | 511 | 518 | 561 | 568 | 611 |
| | $B_2$ | 570 | 613 | 620 | 663 | 670 | 713 | 720 | 763 | 770 | 813 |
| | $B_3$ | 620 | 663 | 720 | 763 | 820 | 863 | 920 | 963 | 1020 | 1063 |
| | $B_4$ | 100 | 143 | 100 | 143 | 100 | 143 | 100 | 143 | 100 | 143 |
| | $B_5$ | 150 | 193 | 200 | 243 | 250 | 293 | 300 | 343 | 350 | 393 |
| Mass (kg) | | 23.6 | | 25.3 | | 27 | | 28.7 | | 30.4 | |

[2] Ball spline shaft end shapes: N: Inner diameter threading (standard), A: Outer diameter threading, C: End face tap.

# Surface Treatment

## THK AP-C Treatment

AP-C treatment is a type of industrial black chrome plating designed to increase corrosion resistance. It costs less and achieves higher corrosion resistance than martensitic stainless steel.

# Technical Materials

## Axial Load Estimate

| DSP model | DSP301606 | DSP402006 | DSP402508 | DSP503206 | DSP603610 | DSP603610H | DSP805012 |
|---|---|---|---|---|---|---|---|
| Ball spline shaft diameter (mm) | 30 | 40 | 40 | 50 | 60 | 60 | 80 |
| Ball screw shaft diameter (mm) | 16 | 20 | 25 | 32 | 36 | 36 | 50 |
| Ball screw lead (mm) | 6 | 6 | 8 | 6 | 10 | 10 | 12 |
| Constant axial load (kN) | 1.6 | 3.2 | 5.6 | 8.4 | 10.9 | 17.8 | 48 |
| Instantaneous axial load (kN) | 3.3 | 6.4 | 11.2 | 16.8 | 21.8 | 35.6 | 120 |

Note) Strength of mounting part must be considered separately.

# ⚠Precautions on Use

## Handling

- Please use at least two people to move any product weighing 20 kg or more, or use a cart or another method of conveyance. Otherwise, it may cause injury or damage the unit.
- Do not disassemble the parts. This may result in loss of functionality.
- Tilting the screw shaft and nut may cause them to fall under their own weight.
- Take care not to drop or strike this product. Otherwise, it may cause injury or damage the unit. Even if there is no outward indication of damage, a sudden impact could prevent the unit from functioning properly.
- When assembling, be sure not to remove the nut from the screw shaft.
- Wear appropriate safety gear, such as protective gloves and safety shoes, when handling the product.

## Precautions on Use

- Prevent foreign materials, such as cutting chips or coolant, from entering the product. Failure to do so could damage the product.
- Prevent foreign materials, such as cutting chips, coolant, corrosive solvents, or water from getting in the product by using a bellows or cover when the product is used in an environment where such a thing is likely.
- The operating temperature range for this product is between -15°C to 80°C (no freezing or condensation).
- If foreign materials such as cutting chips adhere to the product, replenish the lubricant after washing the product.
- Slight oscillations can inhibit the formation of an oil film between the raceways and the area of contact for the balls, resulting in fretting. Therefore, be sure to use a type of grease with high fretting resistance.
  We recommend periodically rotating the nut once to help ensure that a film forms between the raceways and balls.
- Do not forcibly drive a pin, key, or other positioning device into the product. This could create indentations in the raceways and impair the product's function.
- Skewing or misalignment of the nut and the element that supports the shaft can drastically reduce service life. Inspect the components carefully and make sure they are mounted correctly.
- If any balls fall out of the nut, contact THK. Do not use the product in that condition.
- If the unit will be mounted vertically, install safety equipment or take other measures to prevent it from falling. The nut may fall under its own weight.
- Do not exceed the permissible rotation speed when using the product. This could damage the product or otherwise cause it to malfunction. Please use the product within the range of speeds we have specified.
- Do not allow the nut to overshoot. The product may malfunction if any of the balls fall out, the circulation components become damaged, or any indentations form in the ball raceways.
  Continuing to use the product under these circumstances may lead to premature wear or damage to the circulation components.
- Insufficient rigidity or accuracy of the mounting surface could cause an unexpected load to act on the ball screw, which could lead to premature failure of the product.
  Therefore, give sufficient consideration to the rigidity and accuracy of the housing and base.
- Do not touch any moving parts while the product is in operation or in an operable state.
- If performing a task involving multiple people, confirm how to perform the work, what signals will be used, and how to handle problems before beginning, and assign another person to monitor the work.
- A stopper is installed inside the product. It is intended to limit the stroke, and may become damaged in the event of a strong impact.

## Lubrication

- Thoroughly wipe off anti-rust oil and feed lubricant before using the product.
- Do not mix different lubricants. Even grease containing the same type of thickening agent may, if mixed, interact negatively due to disparate additives or other ingredients.
- When using the product in locations exposed to constant vibrations or in special environments such as in clean rooms, vacuums, and low/high temperatures, use a lubricant suitable for its use/environment.
- When lubricating products that do not feature a grease nipple or oil hole, directly coat the raceways with lubricant and perform several warm-up strokes to ensure that the grease permeates the interior.
- Grease viscosity can vary depending on the temperature. Please keep in mind that the torque may be affected by changes in viscosity.
- After lubrication, the rotational torque of the DSP may increase due to the stirring resistance of the grease. Be sure to perform a warming-up operation and allow the grease to break in sufficiently before operating the machinery.
- Excess grease may spatter after lubrication. Wipe off spattered grease as necessary.
- Grease deteriorates over time, which decreases the lubricity. Perform regular grease inspections and replenish grease based on frequency of use.
- The greasing interval varies depending on the usage conditions and environment. Grease the system approximately every 500 km of travel distance (6 months). The final greasing interval/amount should be set at the actual machine.
- There is a risk that lubrication may not work sufficiently if the lubricating oil does not circulate due to the mounting orientation or the oiling port of the nut, so be sure to give these factors adequate consideration during design.
- It is necessary to provide adequate lubrication when using the DSP. Using the product without lubrication may increase wear on the rolling elements and shorten the service life.

## Storage

- When storing the DSP, pack it as designated by THK and store it indoors in a horizontal position away from high or low temperatures and high humidity.
- Please note that if the product has been kept in storage for an extended period, the lubricant inside may have deteriorated. Please ensure that you replenish the lubricant before using.

## Disposal

- The product should be treated as industrial waste and disposed of appropriately.

## Other Recommended Products

Press Series

### For servo press

# PC

- ○ Achieves high thrust, with 250 kN instantaneous maximum thrust
- ○ Electric actuator with DSP built in
- ○ Select from a wide variety of controllers

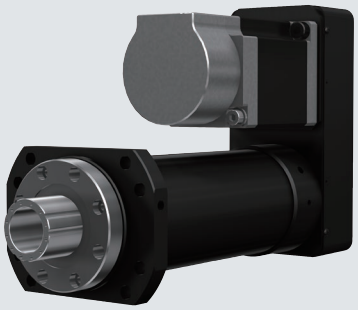

Press Series

### Cylinder type

# PCT

- ○ Wide selection of rated thrust from approx. 100 N to 800 N
- ○ Select either direct motor coupling or motor wrap
- ○ Supports a flexible variety of mounting orientations

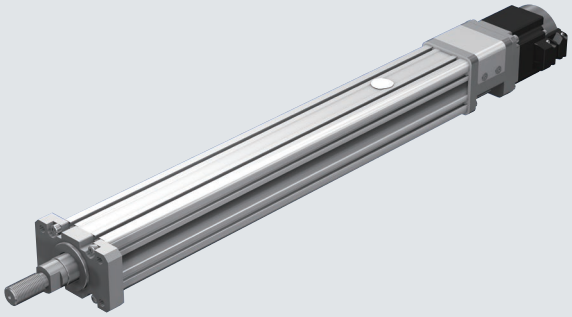

Ball Spline with Integrated Ball Screw **DSP**


● **LM Guide and Caged Ball are registered trademarks of THK CO., LTD.**

● The actual products may differ from the illustrations and photographs in this catalog.

● Outward appearances and specifications are subject to change without notice for the purpose of improvement. Please consult with THK before using.

● Although great care has been taken in the production of this catalog, THK will not take any responsibility for damages resulting from typographical errors or omissions.

● For exports of our products and technologies and sales for export, our basic policy is to comply with the Foreign Exchange and Foreign Trade Act and other laws and regulations. Please consult us in advance if you want to export our products by the piece.

All rights reserved.



# THK CO., LTD.

**Headquarters** 2-12-10 Shibaura, Minato-ku, Tokyo 108-8506 Japan

**International Sales Department** Phone: +81-3-5730-3860

**www.thk.com**



CATALOG No.421-2E ©THK CO., LTD. 202207