NEW

High-Acceleration and Low-Resistance

Miniature LM Guide

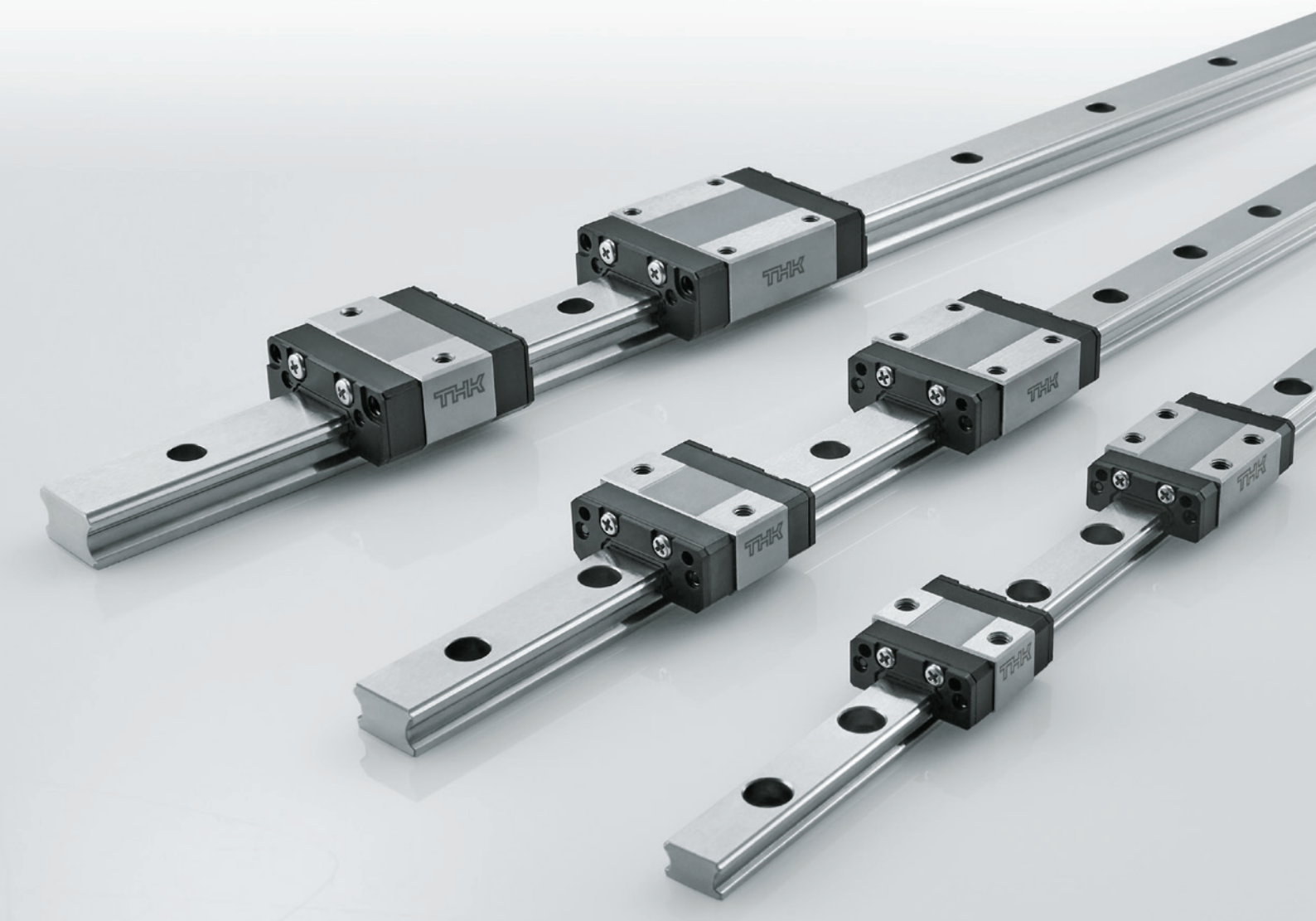

High-acceleration performance for increased semiconductor chip production capacity

A new miniature LM Guide that has reached
the next stage of evolution through THK's core technology

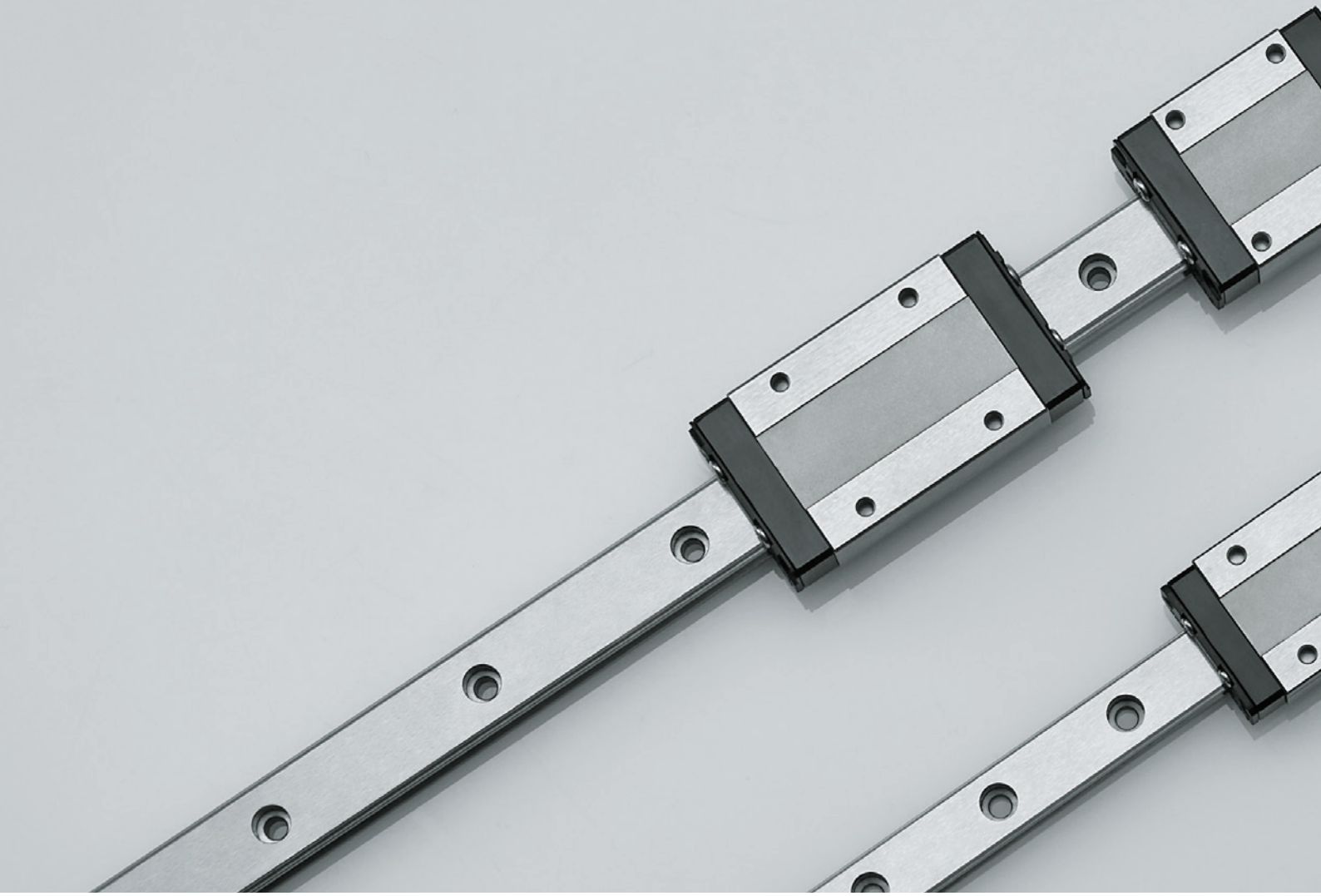

High-Acceleration and Low-Resistance

Miniature LM Guide

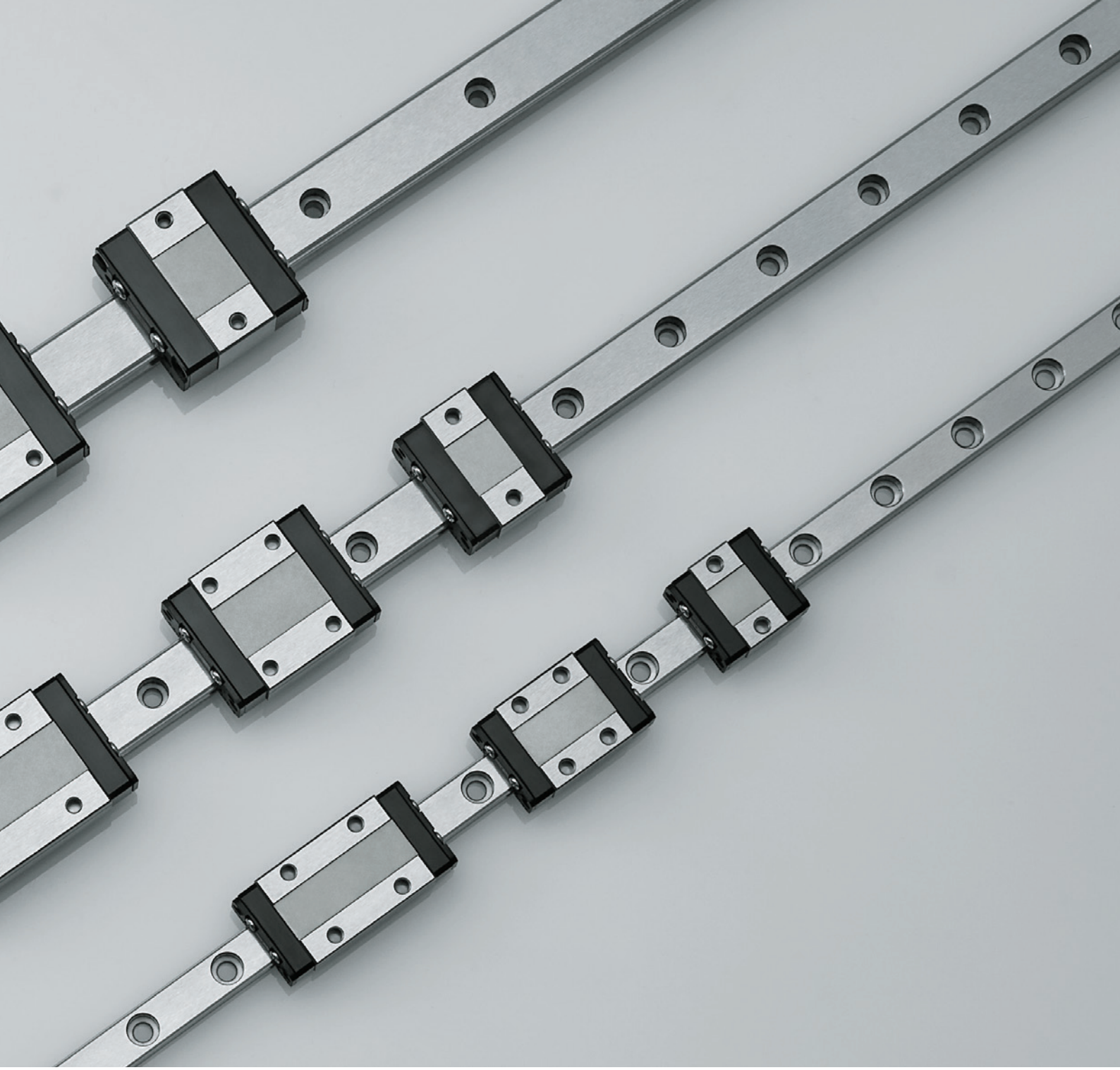

Feature 1 **High Speed and High Acceleration**

Feature 2 **Low Sliding Resistance**

Feature 3 **Interchangeable mounting dInterchangeable Mounting Dimensionsimensions**

High-acceleration performance for increased semiconductor chip production capacity

Feature 1 High Speed and High Acceleration

The newly developed circulation component is stronger and more resilient. This contributes to productivity improvements by increasing robustness during high-speed, high-acceleration operations.

Maximum speed: 5 m/s **Maximum acceleration: 300 m/s^2**

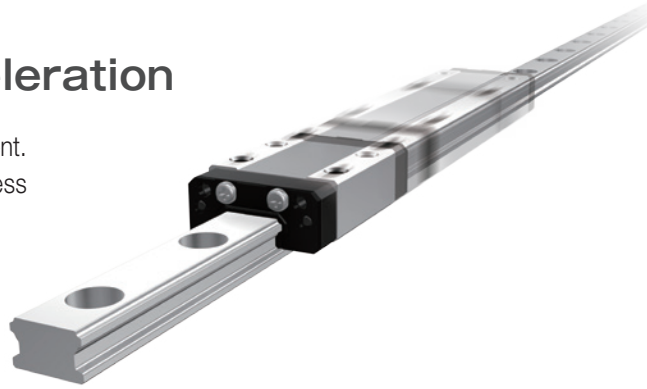

Feature 2 Low Sliding Resistance

Low resistance is made possible by THK's core technology, the ideal four circular arc grooves and two-point contact structure. This contributes to greater servo control.

Mounting orientation: Horizontal
Preload: C1
Lubricant: AFF Grease

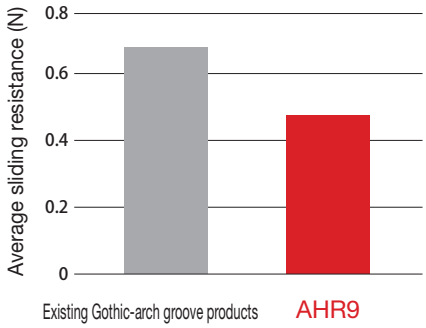

2-Point Circular Arc Contact

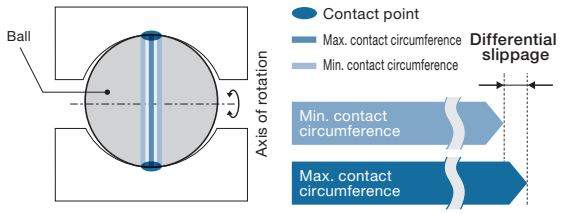

4-Point Gothic-Arch Contact

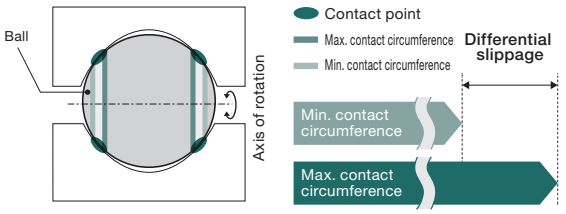

Feature 3 Interchangeable Mounting Dimensions

This product can replace existing Miniature LM Guide units that utilize Gothic-arch grooves, as their mounting dimensions are interchangeable.

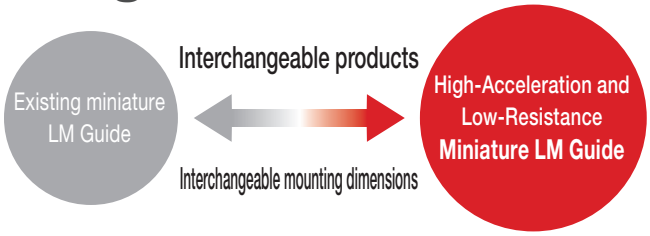

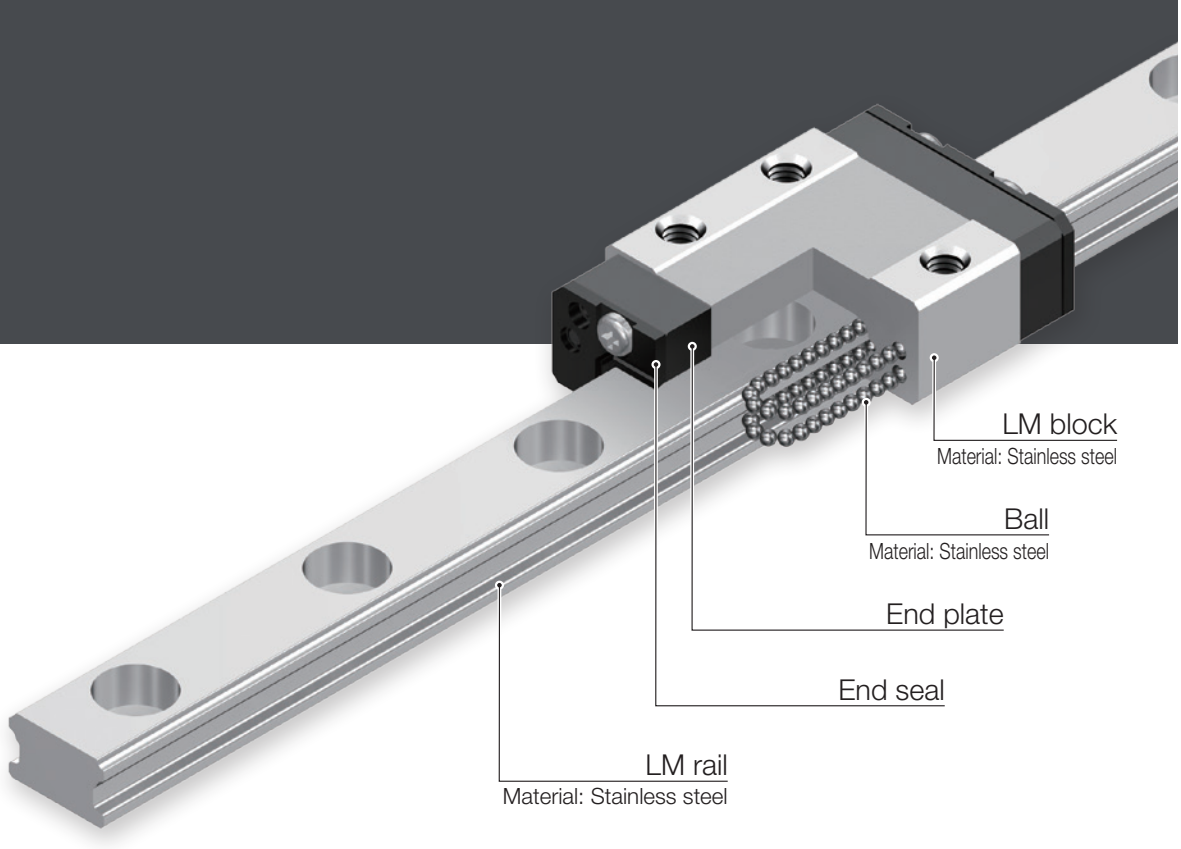

Structure

The newly developed circulation component enables high-speed, high-acceleration operation, making it ideal for meeting the demand for increased productivity from semiconductor manufacturing equipment.

Additionally, each row of balls is placed at a contact angle of 45° so that loads are uniform in the four directions (radial, reverse-radial, and lateral directions), enabling the miniature LM Guide to be used in all orientations.

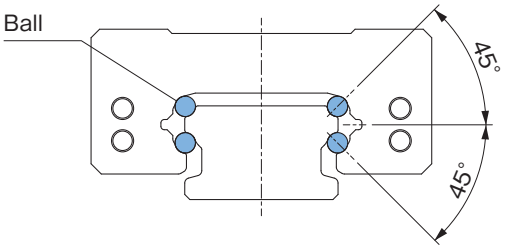

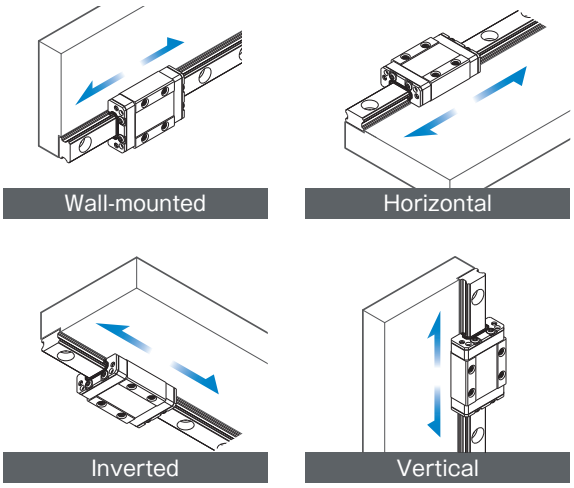

Lineup

Model AHR-S Sizes: 9, 12, 15

This type has a shorter overall LM block length (L) than the Model AHR-M.

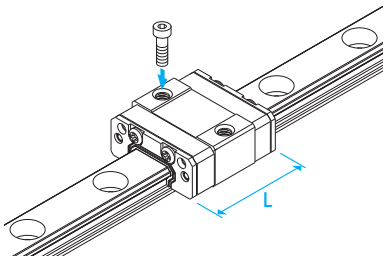

Model AHR-M Sizes: 9, 12, 15

This model is the standard type of AHR.

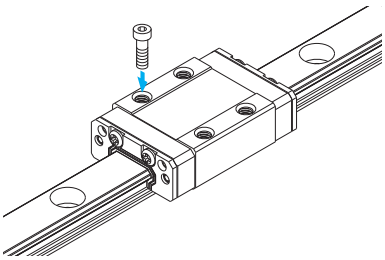

Model AHR-N Sizes: 9, 12, 15

This type has a longer overall LM block length (L) and a larger load rating and permissible moment than the Model AHR-M.

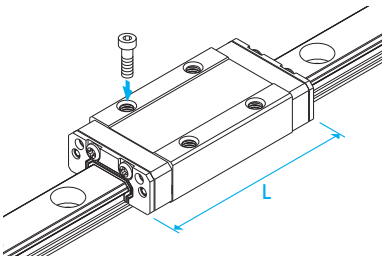

Lubrication

Standard Grease

AFF Grease uses a high-grade synthetic oil for the base oil, a lithium-based consistency enhancer, and a special additive. As a result, it achieves stable rolling resistance, low dust generation, and high fretting resistance at a level that conventional vacuum greases or low dust-generating greases have not.

Note: Non-standard greases are also available. Contact THK for details.

AFF Representative Physical Properties

Item		Representative property	Testing method
Consistency enhancer		Lithium-based	
Base oil		High-grade synthetic oil	
Base oil kinematic viscosity: mm^2/s (40°C)		100	JIS K 2220 23
Worked penetration (25°C, 60 W)		315	JIS K 2220 7
Mixing stability (100,000 W)		345	JIS K 2220 15
Dropping point: °C		220	JIS K 2220 8
Evaporation volume: mass% (99°C, 22 h)		0.7	JIS K 2220 10
Oil separation rate: mass% (100°C, 24 h)		2.6	JIS K 2220 11
Copper plate corrosion (B method, 100°C, 24 h)		Passed	JIS K 2220 9
Low-temperature torque: mN·m (-20°C)	Starting	220	JIS K 2220 18
	Rotational	60	
4-ball testing (welding load): N		1,236	ASTM D2596
Operating temperature range: °C		-40 to 120	
Color		Reddish brown	

Static Safety Factor

To calculate a load applied to the LM Guide, you must first obtain the average load required to determine the service life and the maximum load needed to determine the static safety factor. In particular, if the system starts and stops frequently, if a cutting load acts on the system, or if a large moment caused by an overhanging load is applied, it may experience an unexpectedly large load. When selecting a model number, make sure that the desired model is capable of supporting the required maximum load (whether stationary or in motion).
Guidelines for the static safety factor are shown in the table to the right.

Static Safety Factor (f_S) (Guideline)

Load conditions[1]	Lower limit of f_S
Without vibrations or impacts	2 or greater
With vibrations or impacts	5 or greater

[1] In general, factors that cause vibration and impacts include acceleration and deceleration, sudden starts and stops, transmission of vibration and impacts from external devices and machines, and changes in processing force over time.

$$f_s = \frac{C_0}{P_{max}}$$

f_S: Static safety factor
C_0: Basic static load rating (N)
P_{max}: Maximum applied load (N)

Nominal Life and Service Life Time

The service life of the LM Guide varies from unit to unit even if they are manufactured through the same process and used in the same operating conditions. Therefore, the modified nominal life defined here is typically used as a guideline for obtaining the service life of the LM Guide.

■ Nominal Life

The nominal life is the total travel distance that 90% of a group of units can achieve without flaking (scale-like pieces on the metal surface peeling off) after individually running under the same conditions.

[1] Basic dynamic load rating (C)
Indicates the load for which the nominal life (L_{10m}) is 100 km when the load is applied with a constant direction and size to a group of identical LM Guide units individually running under the same conditions.

$$L_{10m} = \left(\frac{f_H \cdot f_T \cdot f_C}{f_W} \cdot \frac{C}{P_C}\right)^3 \times 50$$

L_{10m}: Modified nominal life (km)
C: Basic dynamic load rating[1] (N)
P_C: Calculated load (N)
f_H: Hardness factor
f_T: Temperature factor
f_C: Contact factor
f_W: Load factor

■ Service Life Time

Once the nominal life (L_{10m}) has been obtained, the service life time can be obtained using the formula shown on the right if the stroke length and the number of cycles are constant.

$$L_h = \frac{L_{10m} \times 10^6}{2 \times \ell_s \times n_1 \times 60}$$

L_h: Service life time (h)
ℓ_s: Stroke length (mm)
n_1: Cycles per minute (min^{-1})

Accuracy Standards

The accuracy of the LM Guide is specified for each model in terms of the dimensional tolerance for height and width, the difference between height and width in a pair, and running parallelism. The Model AHR has three types of accuracy standards: Normal grade, High Accuracy grade and Precision grade.

■ Difference in Height M

The difference in height M indicates the difference between the minimum and maximum values of the height (M) of each of the LM blocks used together on the same plane.

■ Difference in Width W_2

The difference in width W_2 indicates the difference between the minimum and maximum values of the width (W_2) between an LM rail and each of the LM blocks mounted together on the LM rail.

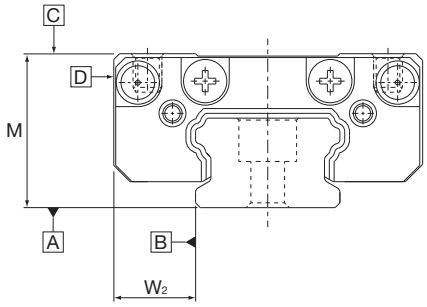

■ Running Parallelism

Running parallelism refers to the tolerance for parallelism between the LM block and the LM rail datum surface when the LM block travels the whole length of the LM rail with the LM rail bolted to a reference surface.

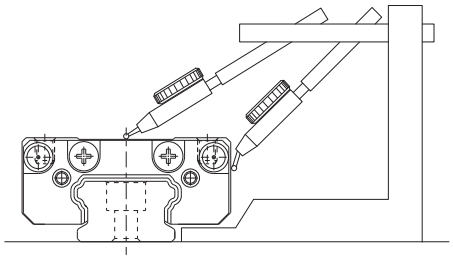

Accuracy Standards Unit: mm

Model No.	Item	Normal grade	High Accuracy grade	Precision grade
		No symbol	H	P
AHR9 AHR12 AHR15	Dimensional tolerance in height M	±0.04	±0.02	±0.01
	Difference in height M	0.005	0.005	0.005
	Dimensional tolerance in width W_2	±0.04	±0.025	±0.015
	Difference in width W_2	0.03	0.02	0.01
	Running parallelism of surface C against surface A	See the table below for LM rail length and running parallelism by accuracy standard		
	Running parallelism of surface D against surface B	See the table below for LM rail length and running parallelism by accuracy standard		

LM Rail Length and Running Parallelism by Accuracy Standard Unit: μm

LM rail length (mm)		Running parallelism value		
Above	Up to	Normal grade	High Accuracy grade	Precision grade
–	40	8	4	1
40	70	10	4	1
70	100	11	4	2
100	130	12	5	2
130	160	13	6	2
160	190	14	7	2
190	220	15	7	3
220	250	16	8	3
250	280	17	8	3
280	310	17	9	3
310	340	18	9	3
340	370	18	10	3
370	400	19	10	3
400	430	20	11	4
430	460	20	12	4
460	520	21	12	4
520	550	22	12	4
550	640	22	13	4
640	670	23	13	4
670	700	23	13	5
700	820	23	14	5
820	850	24	14	5
850	970	24	15	5
970	1,030	25	16	5
1,030	1,150	25	16	6
1,150	1,330	26	17	6
1,330	1,420	27	18	6
1,420	1,510	27	18	7
1,510	1,830	28	19	7
1,830	2,000	28	19	8

Dimensional Table

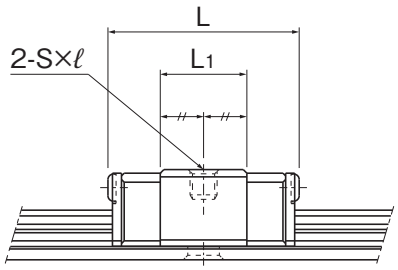

Models AHR9S and AHR12S

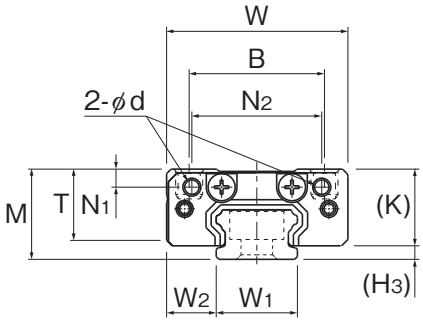

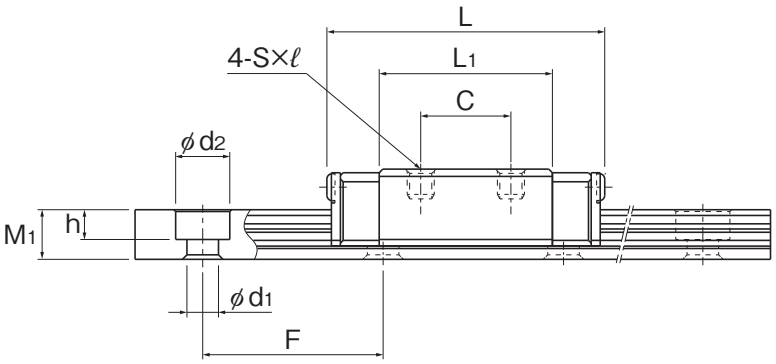

Models AHR9 M/N, AHR12M/N

Model No.		Outer dimensions			LM block dimensions											H3	
		Height	Width	Length			Mounting hole						Lubrication hole	Grease nipple		
		M	W	L	B	C	Sxℓ	L1	T	K	N1	N2	E	d			
AHR9	S	10	20	21.2	15	–	M3×2.8	9.6	7.9	8.5	2	14.4	–	1.6	–	1.5	
	M			30.8		10		19.2									
	N			40.4		16		28.8									
AHR12	S	13	27	25	20	–	M3×3.2	11	9.2	10.9	2.4	20.4	–	2	–	2.1	
	M			34.6		15		20.6									
	N			47.1		20		33.1									
AHR15	S	16	32	30.9	25	–	M3×3.5	13.7	11.6	13.3	3	27	3.8	–	PB107	2.7	
	M			42.9		20		25.7									
	N			58.9		25		41.7									

Model Number Coding

Select an option Fixed symbol

2	AHR9	M	UU	C1	+1000L	P	M	-II
Number of LM blocks on one rail	Model No.	LM block type S/M/N	Contamination protection accessory symbol No symbol: Without seal UU: With end seal	Radial clearance symbol Light preload (C1)[1]	LM rail length	Accuracy symbol No symbol: Normal grade H: High Accuracy grade P: Precision grade	Stainless steel LM rail	Symbol for number of rails used on the same plane

[1] An appropriate preload is applied with no clearance.

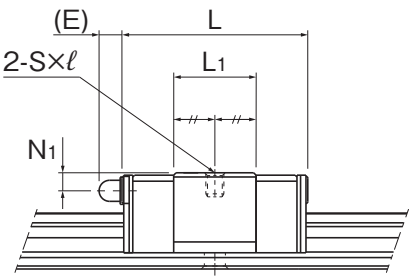

Model AHR15S

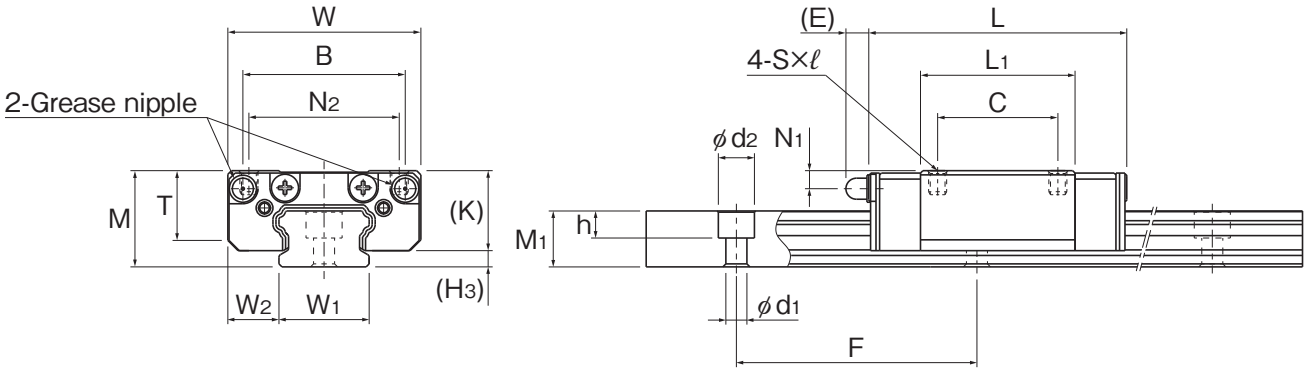

Models AHR15M/N

Unit: mm

	LM rail dimensions					Basic load rating		Static permissible moment* kN·m					Mass	
	Width W_1 $^{0}_{-0.02}$	W_2	Height M_1	Pitch F	Mounting hole $d_1 \times d_2 \times h$	C (kN)	C_0 (kN)	M_A 1 block	M_A 2 blocks	M_B 1 block	M_B 2 blocks	M_C 1 block	LM block (kg)	LM rail (kg/m)
	9	5.5	5.5	20	3.5×6×3.3	1	1.54	2.46	25.5	2.46	25.5	6.21	0.012	0.298
						1.62	3.08	8.95	67.6	8.95	67.6	12.4	0.019	
						2.16	4.63	19.5	121	19.5	121	18.7	0.028	
	12	7.5	7.3	25	3.5×6×4.5	1.64	2.36	4.49	46.6	4.49	46.6	12.8	0.024	0.557
						2.53	4.38	14	109	14	109	23.7	0.038	
						3.54	7.08	34.9	218	34.9	218	38.3	0.057	
	15	8.5	9.3	40	3.5×6×4.5	2.7	3.75	8.99	93.3	8.99	93.3	25.2	0.04	0.936
						4.17	6.96	28	203	28	203	46.8	0.066	
						5.84	11.24	69.8	412	69.8	412	75.5	0.102	

Notes: Static permissible moment* 1 block: Static permissible moment value with 1 LM block
2 blocks: Static permissible moment value with 2 blocks in close contact with each other

The balls will fall out of the block if it is removed from the rail.

Standard and Maximum Lengths of the LM Rail

The standard and maximum lengths of Model AHR LM rails are shown in the following table. If the maximum length of the desired LM rail exceeds these values, joint rails will be used. Contact THK for details. For special rail lengths, it is recommended to use a value corresponding to the G, g dimensions from the table. As the G, g dimensions increase, that portion becomes less stable, and the accuracy may be negatively affected.

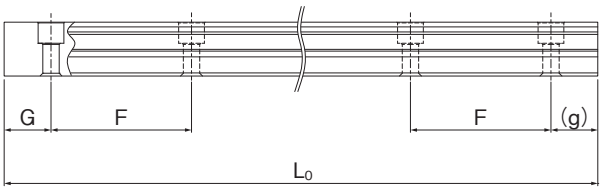

Standard and Maximum Lengths of the LM Rail Unit: mm

Model No.	AHR9	AHR12	AHR15
LM rail Standard length (L_0)	55	70	70
	75	95	110
	95	120	150
	115	145	190
	135	170	230
	155	195	270
	175	220	310
	195	245	350
	275	270	390
	375	320	430
	–	370	470
	–	470	550
	–	570	670
	–	–	870
Standard pitch F	20	25	40
G, g dimension	7.5	10	15
Max. length	1,240	2,000	2,000

Shoulder Height of the Mounting Base and the Corner Radius

The LM rail and LM block ordinarily have a reference surface on the side face to allow easy installation and highly accurate positioning. The corner of the mounting shoulder must be machined to have a recess, or machined to be smaller than the corner radius r, to prevent interference with the chamfer of the LM rail or the LM block.

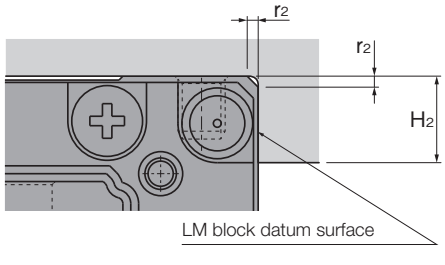

LM block

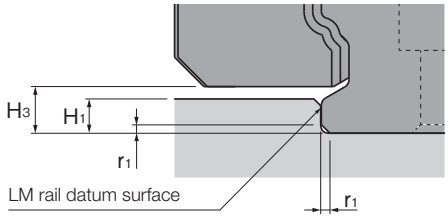

LM rail

Shoulder Height of the Mounting Base and the Corner Radius Unit: mm

Model No.	LM rail corner radius r_1 (max)	LM block corner radius r_2 (max)	LM rail shoulder height H_1	LM block shoulder height H_2	H_3
AHR9	0.1	0.3	1	2.8	1.5
AHR12	0.3	0.2	1.3	3	2.1
AHR15	0.3	0.4	1.7	5.8	2.7

Handling

(1) Please use at least two people to move any product weighing 20 kg or more, or use a cart or another method of conveyance. Otherwise, it may cause injury or damage the unit.
(2) Do not disassemble the parts. This may result in loss of functionality.
(3) Tilting an LM block or LM rail may cause it to fall by its own weight.
(4) Take care not to drop or strike the LM Guide. Otherwise, it may cause injury or damage the unit. Even if there is no outward indication of damage, a sudden impact could prevent the unit from functioning properly.
(5) Do not remove the LM block from the LM rail during setup.
(6) Placing a hand inside the LM rail mounting hole may lead to the hand being caught between the block and rail and cause injury.
(7) Wear appropriate safety gear, such as protective gloves and safety shoes, when handling the product.

Precautions on Use

(1) Prevent foreign material, such as cutting chips or coolant, from entering the product. Failure to do so could damage the product.
(2) If the product is used in an environment where cutting chips, coolant, corrosive solvents, water, etc., may enter the product, use bellows, covers, etc., to prevent them from entering the product.
(3) Do not use the product at temperatures of 80°C or higher. Unless the unit is specially designed to be heat-resistant, exposure to such temperatures may deform or damage plastic and rubber parts.
(4) If foreign materials such as cutting chips adhere to the product, replenish the lubricant after cleaning the product.
(5) Very small strokes can inhibit the formation of an oil film between the raceways and the area of contact for the balls, resulting in fretting. Therefore, be sure to use a type of grease with high fretting resistance properties if the stroke will be small. We recommend periodically allowing the LM block to stroke a distance roughly equal to its length to help ensure that a film forms between the raceways and balls.
(6) Do not forcibly drive a pin, key, or other positioning device into the product. This could create indentations on the raceway and impair the product's function.
(7) If, for operational reasons, it becomes absolutely necessary to remove the LM block from the LM rail and reattach it, a special removing/mounting jig must be used for this purpose. (The removing/mounting jig is not provided as standard. To obtain one, contact THK.)
(8) When using a removing/mounting jig, align the ends of the LM rail and the jig and mount the block when the jig and rail are parallel.
(9) Mounting the block while it is tilted can lead to contamination by foreign materials, damage to internal components, or dropped balls.
(10) Inserting and using the LM block on the LM rail while balls are missing could lead to premature failure of the product.
(11) If any balls fall out of the LM block, contact THK. Do not use the product in that condition.
(12) If the LM Guide breaks due to an accident or another cause, the LM block may become dislodged from the LM rail and fall. For the safe use of these products, take precautions such as adding a mechanism to prevent blocks from falling.
(13) For the bolt length, select a length that will leave a clearance at the bolt tip in relation to the effective tap depth.
(14) If the rigidity or accuracy of an attached component is insufficient, the bearing load will be concentrated at one location and performance will decline significantly. Therefore, carefully consider the rigidity and accuracy of the housing and base, and the strength of the securing bolts.
(15) When removing the LM block from the LM rail and then replacing the block, an LM block mounting/removing jig that facilitates such installation is available. Contact THK for details.

Lubrication

(1) Thoroughly remove anti-rust oil and apply lubricant before using the product.
(2) Do not mix different lubricants. Even greases containing the same type of consistency enhancer may, if mixed, interact negatively due to disparate additives or other ingredients.
(3) When using the product in locations exposed to constant vibrations or in special environments such as in clean rooms, vacuums, and low/high temperatures, use a lubricant suitable for its use/environment.
(4) When lubricating a product having no grease nipple or lubrication hole, apply grease directly on the raceway and stroke the product several times to let the grease spread inside.
(5) The consistency of grease changes according to the temperature. Please keep in mind that the LM Guide's sliding resistance may be affected by changes in viscosity.
(6) After lubrication, the sliding resistance of the LM Guide may increase due to the stirring resistance of the grease. Be sure to perform a warm-up operation and allow the grease to break in sufficiently before operating the machine.
(7) Excess grease may spatter after lubrication. Wipe off spattered grease as necessary.
(8) Grease deteriorates over time, which decreases its lubricity, so perform regular grease inspections and replenish grease based on frequency of use.
(9) How often grease should be replenished varies depending on the operating conditions and environment. We recommend greasing the system approximately every 100 km traveled (3 to 6 months). The final lubrication interval/amount should be set at the actual machine.
(10) The lubricant may not reach the raceway if the LM Guide is not installed in a horizontal orientation.
(11) When adopting oil lubrication, the lubricant may not be distributed throughout the LM System depending on the mounting orientation of the LM block. Contact THK for details.

Storage

When storing the LM Guide, pack it as designated by THK and store it indoors in a horizontal position away from high or low temperatures and high humidity.
Please note that if the product has been kept in storage for an extended period, the lubricant inside may have deteriorated. Please ensure that you replenish the lubricant before use.

Disposal

The product should be treated as industrial waste and disposed of appropriately.

High-Acceleration and Low-Sliding Resistance Miniature LM Guide

● **“LM Guide” and “ ” are registered trademarks of THK CO., LTD.**

● The actual products may differ from the pictures and photographs in this catalog.
● Outward appearances and specifications are subject to change without notice for the purpose of improvement. Please consult with THK before using.
● Although great care has been taken in the production of this catalog, THK will not take any responsibility for damage resulting from typographical errors or omissions.
● For exports of our products and technologies and sales for export, our basic policy is to comply with the Foreign Exchange and Foreign Trade Act and other laws and regulations. Please consult us in advance if you want to export our products by the piece.

All rights reserved

THK CO., LTD.

Global Headquarters 2-12-10 Shibaura, Minato-ku, Tokyo 108-8506 Japan
International Sales Department Phone: +81-3-5730-3860
www.thk.com

CATALOG No.442E ©THK CO., LTD. 202408