High-Speed Roller Ring RT



Structure and Features

The High-Speed Roller Ring Model RT has a roller contact structure suitable for high-speed rotation to suppress heat generation during high-speed rotation and achieves a Dpw·N value of 300,000. It contributes to shortening cycle times by increasing the rotational speed of rotary tables in multi-functional machines.

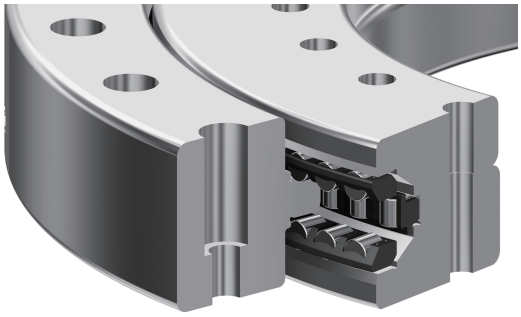

Internal structure
(double axial rows and single radial row)

Superior high-speed performance

Adopts a roller contact structure suitable for high-speed rotation, achieving a Dpw·N value of 300,000. Can also be adopted for lathe turning when used in the rotary table of multi-functional machines.

High rigidity

Possesses high moment rigidity with two rows of rollers in the axial direction and one row in the radial direction, making it optimal for rotary tables of five-axis machine tools.

Easy to Install

Features mounting holes in the inner and outer rings, which eliminates the need for other mounting components and allows the product to attach directly to shafts and housings.

Lineup

Unit: mm

Model No.	Inner diameter	Outer diameter
RT228	160	295
RT297	210	380
RT445	350	540
RT665	580	750

Dimensional Table

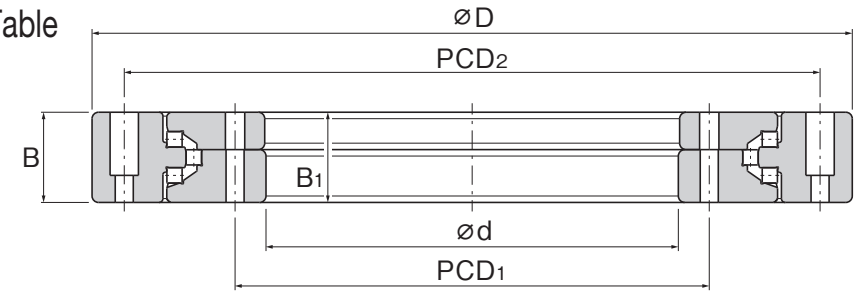

Unit: mm

Model No.	Main dimensions			Mounting hole dimensions				Basic load rating (radial)		Basic load rating (axial)	
	Inner diameter	Outer diameter	Width	Inner ring		Outer ring		Cr	C0r	Ca	C0a
	d	D	B, B1	PCD1	Mounting hole	PCD2	Mounting hole	kN	kN	kN	kN
RT228	160	295	35	184	24-Ø7 drilled through	270	24-Ø7 drilled through, Ø11 counterbore depth 24.5	41.7	90.6	83.8	535
RT297	210	380	40	240	24-Ø9.3 drilled through	350	24-Ø9.3 drilled through, Ø14.5 counterbore depth 28	71.7	161	144	950
RT445	350	540	50	385	32-Ø9.3 drilled through	505	32-Ø9.3 drilled through, Ø14.5 counterbore depth 35	119	307	238	1780
RT665	580	750	60	610	32-Ø10 drilled through	720	32-Ø10 drilled through, Ø15 counterbore depth 42	187	548	366	3090

Model Number Coding

Select an option Fixed symbol

RT228 **CC0** **P2** **B** **-N**

Model No.

Radial clearance symbol
CC0: Negative clearance
(preload specification)

Accuracy symbol
No symbol: Rotational accuracy grade 5
P4: Rotational accuracy grade 4
P2: Rotational accuracy grade 2
USP: Rotational accuracy grade USP

Component accuracy symbol
No symbol: Rotational accuracy of the inner ring
R: Rotational accuracy of the outer ring
B: Rotational accuracy of the inner and outer rings

Option symbols
No symbol: No attached grease nipple
-N: Grease nipples included (x4)

● **"LM Guide" and "** **" are registered trademarks of THK CO., LTD.**

● The actual products may differ from the pictures and photographs in this catalog.
● Outward appearances and specifications are subject to change without notice for the purpose of improvement. Please consult with THK before using.
● Although great care has been taken in the production of this catalog, THK will not take any responsibility for damage resulting from typographical errors or omissions.
● For exports of our products and technologies and sales for export, our basic policy is to comply with the Foreign Exchange and Foreign Trade Act and other laws and regulations. Please consult us in advance if you want to export our products by the piece.

All rights reserved

THK CO., LTD.

Global Headquarters 2-12-10 Shibaura, Minato-ku, Tokyo 108-8506 Japan
International Sales Department Phone: +81-3-5730-3860
www.thk.com